INCIDENT COMMAND

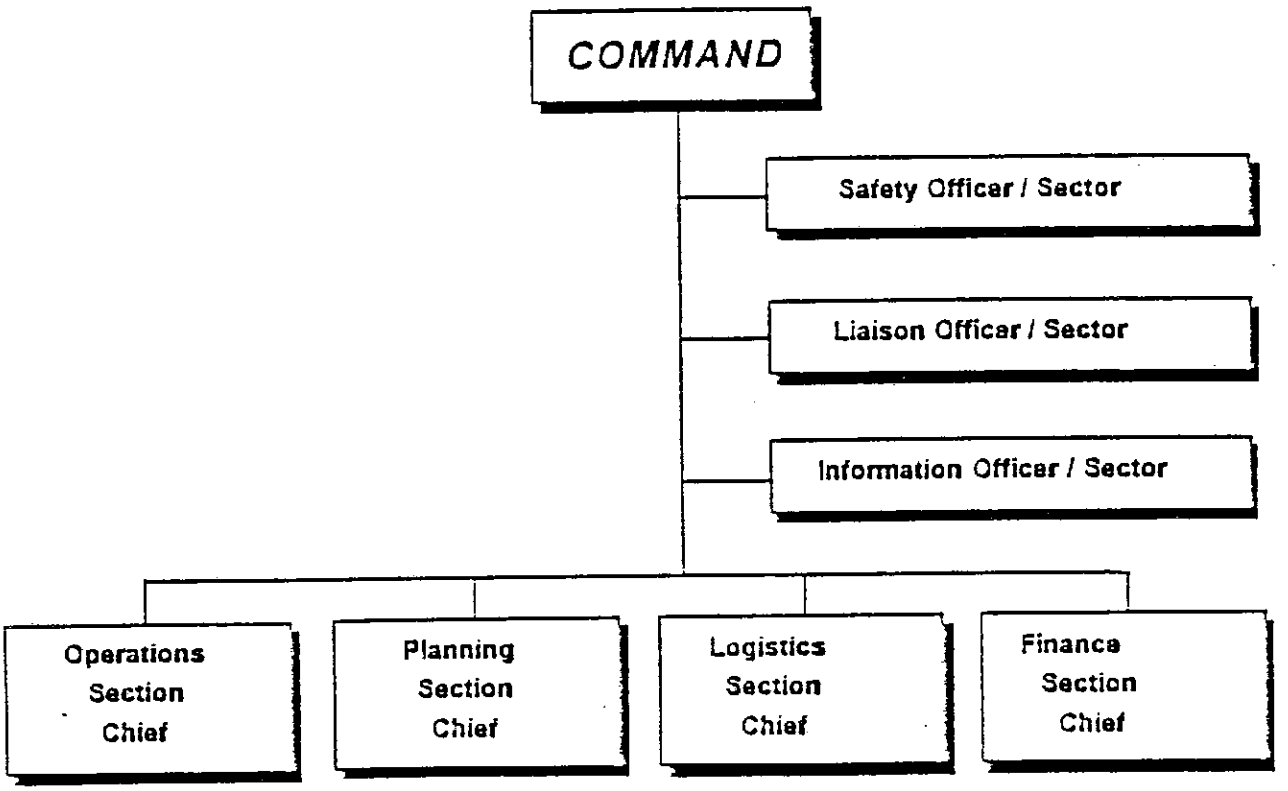

PLYMOUTH COUNTY,
Massachusetts

JUNE 1993 - Revision 1

TABLE OF CONTENTS

ACKNOWLEDGMENTS 1

INTRODUCTION 2

PURPOSE & SCOPE 4

RESPONSIBILITIES OF COMMAND 5

ESTABLISHING INCIDENT COMMAND 7

THE COMMAND FUNCTION 8
- Assuming COMMAND 8
- Passing COMMAND 8
- Transfer of COMMAND 9

SIZE-UP 11
- Facts 11
- Probabilities 11
- Your Situation 11
- Decision 12
- Plan of Operation 14

COMMUNICATIONS 15
- Brief Initial Report 17
- Brief Progress Report 19

STAGING 21
- Level I Staging 22
- Level II Staging 24

SECTORING 27
- Advantages 28
- Assigning Sectors 29
- Sector Officers 30
- Sector Classification 31

COMMAND STAFF AND SUPPORT FUNCTIONS 44
- Introduction 44
- Organizational Chart 45
- The Command Post 46
- Command Staff Positions 48
  - Safety Officer 49
  - Information Officer 50
  - Liaison Officer 55
- Command Support Functions 56
  - Operations 57
  - Planning 60

Logistics 62
Finance 64

TERMS AND DEFINITIONS 67

APPENDIX 73
MCI PLAN 74
ICS WORKSHEET - FIRE 75
ICS WORKSHEET - HazMat 76

PLYMOUTH COUNTY

INCIDENT COMMAND SYSTEM

ACKNOWLEDGMENTS

INTRODUCTION (cont.)

It shall be a matter of departmental policy that all personnel be familiar with this manual and fully functional in any position which he/she might reasonably be expected to fill.

PURPOSE & SCOPE

The Incident Command System is a management system designed to control personnel, facilities, equipment, and communications throughout an emergency operation. It is designed to begin developing from the time an incident occurs until the requirement for management and operations no longer exists. The structure of the Incident Command System can be established and expanded depending upon the changing conditions of the incident. The Incident Command System meets the following operating requirements necessary of any emergency management process:

* Management capabilities for:

    1. Single jurisdiction/single agency involvement.
    2. Single jurisdiction/multi-agency involvement.
    3. Multi-jurisdiction/multi-agency involvement.

* Organizational structure adaptable to any emergency or incident to which fire protection agencies would be expected to respond.

* Applicable and acceptable to users throughout the country.

* Readily adaptable to new technology.

* Ability to expand in a logical manner from an initial attack situation into a major incident.

* Basic common elements in organizations, terminology, and procedures.

* Implementation with the least possible disruption to existing systems.

* Effective in fulfilling all management requirements yet simple enough to insure low operational maintenance costs.

As such, the system can be utilized for any type or size of emergency ranging from a minor incident involving only a few units to a major incident involving several agencies. It is intended to be staffed and operated by qualified personnel from any emergency services agency and may involve personnel from a variety of agencies.

RESPONSIBILITIES OF COMMAND

In order to develop a well orchestrated response to any incident scene, clear lines of authority, responsibility, and accountability must be defined. To this end the following policy shall provide direction and authority for the command function.

I. **Command Procedure**

A. The effective functioning of all units and personnel at any incident requires clear decisive action on the part of an incident commander.

B. This procedure fixes responsibility for the command function and its associated duties on one individual at any time during an incident.

C. Command procedures are designed to accomplish the following:

1. Fix the responsibility for **COMMAND** on a specific individual.

2. Establish strong, direct, and visible **COMMAND** as early as possible in the operation.

3. Establish an effective framework for activities and responsibilities.

4. Provide a system for the orderly transfer of **COMMAND** to subsequent arriving authorities.

II. **Authority & Responsibility**

A. Command Responsibilities:

1. Assess incident priorities.

2. Determine strategic goal(s).

3. Determine tactical objective(s).

4. Develop incident action plan.

5. Develop appropriate organizational structure.

6. Manage incident resources.

II. **Authority & Responsibility:**

A. Command Responsibilities: (cont.)

7. Coordinate overall incident activities.

8. Ensure safety of on-scene personnel.

9. Coordinate activities of outside agencies.

10. Authorize release of information to media.

B. Normal Operating Procedure:

1. The 1st arriving company officer, acting officer, or otherwise senior individual on the 1st arriving unit shall be responsible for, and shall have the authority to exercise, all **COMMAND** functions deemed reasonable and prudent until such time as they are relieved by proper authority.

2. The 1st arriving company officer, acting officer, senior individual on the 1st arriving unit shall:

A. Perform a size-up in accordance with the size-up standard.

B. Determine the appropriate strategies and tactics.

C. Assign tactical objectives as required, including support.

D. Transmit the Brief Initial Report in accordance with the BIR standard.

E. Determine the need for assistance and request such assistance as necessary.

ESTABLISHING INCIDENT COMMAND

To be effective, the Incident Command System (ICS) must be established early. A major advantage of its use is that ICS can be built upon as the incident grows in magnitude and reduced as the situation is brought under control. Once established, other components can be added or modified as desired.

When the Incident Command System is being established, the first arriving fire officer or senior firefighter to arrive on location should assume command. The assumption of command will be accompanied by a radio transmission indicating command and the unit number, if any.

The first fire department officer to arrive on the scene, if a non-officer has assumed command must relieve that person of command.

During multi-company operations, a first arriving fire officer should assume command, however, the senior or ranking officer on scene always assumes responsibility for the operation, while on location.

THE COMMAND FUNCTION

A. Assuming COMMAND:

1. Is the result of a conscious decision by the company officer or senior firefighter in the 1st arriving unit that the incident requires immediate command and control or that there are sufficient resources available to adequately handle the necessary tactical objectives. In this situation the Incident Commander must remain in a position to appropriately manage the incident.

2. Must be done by the company officer or senior firefighter in the next arriving unit if **COMMAND** was passed by the 1st arriving company officer or senior firefighter.

   May be done by higher ranking officers as the incident dictates.

B. **Passing COMMAND:**

1. May only be done by the 1st arriving company officer, or senior firefighter on the 1st arriving unit.

2. May be done only after all other necessary command functions have been completed according to the (BIR) Brief Initial Report format.

3. Shall be the result of a conscious decision by the company officer or senior firefighter that they must necessarily commit themselves to a tactical objective and, therefore, can not be in an appropriate position to adequately manage the incident.

4. When **COMMAND** is passed, the next arriving unit must report to the scene rather than to Level I staging.

5. Considerations for passing/assuming COMMAND:

   A. Size & complexity of the incident:

      1. Small or less complex incidents where your immediate assistance in a tactical operation would have a positive impact on the outcome might indicate the need to **PASS COMMAND.** Example: Room and contents fire; a limited number of persons trapped; etc.

B. Passing COMMAND: (cont.)

2. Investigating where the status reported is nothing evident. This constitutes a tactical objective which might place you in an inappropriate position to adequately manage the incident should something go wrong. **PASSING COMMAND** may be appropriate.

3. The magnitude or type of incident may require immediate command and control of resources. Example: Significant haz-mat incidents; structure fires requiring resources beyond the 1st alarm assignment; many persons trapped or a large scale evacuation; mass casualty incidents; etc. Assuming **COMMAND** would be appropriate.

B. Availability of relief:

1. If senior authority is close at hand, **PASSING COMMAND** may be appropriate.

2. If senior authority will be significantly delayed, assuming **COMMAND** may be appropriate.

C. Transfer of COMMAND:

1. Transfer of **COMMAND** refers to the act of one individual relieving another individual of authority, responsibility, and accountability as it pertains to the execution of the function of **COMMAND** on any given incident. The progressive chain-of-command principle shall be utilized.

A. Should an incident commander be of a non-officer grade, they shall be relieved as soon as practical by the 1st arriving officer.

B. The 1st officer to assume **COMMAND** shall retain **COMMAND** until formally relieved by a ranking officer. Ranking officers shall have the discretionary authority to relieve a subordinate officer of **COMMAND**. However, the senior officer present assumes accountability regardless of whether or not they assume **COMMAND**.

C. Transfer of COMMAND: (cont.)

2. Transfer of **COMMAND** Procedure:

   A. At all times possible, transfer of **COMMAND** shall be done face to face. When a face to face transfer can not be accomplished, the incoming senior individual may assume **COMMAND** immediately, but MUST make every effort to gain the necessary information as soon as possible.

   B. The individual preparing to assume **COMMAND** shall, at an appropriate moment, request a status report from the Incident Commander.

   C. The Incident Commander shall brief the incoming individual as to:

      1. The current situation.
      2. Any injuries, loss of life, etc.
      3. All current control efforts and the status of those efforts.
      4. The anticipated course of the incident.
      5. The location of on scene resources.
      6. Any other information pertinent to the incident.

   D. When the incoming individual is fully prepared to assume **COMMAND**, he or she shall then formally relieve the current incident commander and reassign that individual as necessary.

All transfers of COMMAND shall be transmitted over the radio.

"Engine 1 to Dispatch, Car 2 is Command."

SIZE-UP

The 1st in company officer or acting officer in the 1st arriving unit is faced with the need to make proper and reasonable decisions under the immediate pressure of the emergency. A size-up system becomes a vital and necessary tool to have in this situation. This same system is also necessary for subsequent incident commanders as their need to make decisions varies with the dynamics of the incident. The following 5-point Size-Up system shall be utilized when operating at an incident:

1. **Facts** (Facts that the situation presents)

   A. Time of the incident
   B. Location of the incident
   C. Nature of the incident
   D. Life hazards
   E. Exposures
   F. Buildings, areas involved
   G. Weather

2. **Probabilities** (Predictions based upon the existing situation)

   A. Life hazards
   B. Extent of the incident
   C. Explosion potential
   D. Collapse potential
   E. Weather changes

3. **Your Situation** (Your resources and capabilities)

   A. Personnel & equipment on scene
   B. Availability of additional resources
   C. Available water supply
   D. Appropriate strategic "<u>attack mode</u>"

   In part, strategy depends on the incident commander's perception of the proper attack mode to employ.

   A decision is made by the IC based on the resources available.

3. **Your Situation** (Your resources and capabilities)(cont.)

THE STRATEGIC FIRE ATTACK MODES FOR STRUCTURAL FIRES ARE AS FOLLOWS:

OFFENSIVE MODE - (Interior Attack) - aggressive attack on the fire situation. On scene forces can apply the required GPM and carry out other needed tasks. Generally, an interior attack is made to control the fire. The resources available and the GPM application ability exceed the requirements for the incident.

DEFENSIVE MODE - (Exterior Attack) - Generally an exterior attack, using a surround and drown operation while protecting exposures. The amount of fire in the structure creates too high a risk to firefighters to allow an interior attack and/or the demand on resources exceeds capability of on-scene units.

OFFENSIVE/DEFENSIVE MODE - A variation of the interior/offensive attack in that it is a combination attack. An aggressive attack will be attempted while backing up hose lines and allowing for defensive coverage, such as covering exposures.

The operation begins by the protection of exposures and working toward an interior attack.

Remember, the type of attack used is based on the availability of resources to apply the needed water flow while accomplishing other necessary fire ground tasks.

E. Actions already taken

4. **Decision** (Based upon analysis of items 1,2,3)

A. Determine strategy
B. Evaluate tactical options

Any evaluation of tactical options must include establishing the order in which basic functions must be performed:

1. Life Safety including moving, removing, and treating people and victims.

2. Incident Control including mitigating and minimizing the threat of the incident or situation.

4. **Decision** (Based upon analysis of items 1,2,3)(cont.)

3. Property Conservation including further loss of property, further threats to property.

C. Evaluate "COMMAND" Options

The initial arriving officer must decide on an appropriate commitment for personnel under his command:

1. NOTHING SHOWING - These situations generally require investigation by the first arriving company while holding staged companies at a distance. Normally the company officer and crew will respond utilizing the portable radio to continue command.

2. FAST ATTACK - Situations that require immediate action to stabilize, such as interior fires in residences, apartments or small commercial occupancies where a fast interior attack is critical, the officer will utilize the portable radio to remain in Command while participating in the firefighting operation. This type operation does not exclude the officer of the responsibility for performing the listed command functions. This operation should not last more than a few moments and will end with one of the following:

   A. Situation is stabilized.

   B. Command is passed to the next arriving company.

   C. Command is transferred.

   D. Situation is not stabilized and the officer must remove him/herself to an outside Command position.

3. COMMAND - Situations that require principally Command. Such situations by virtue of the size, complexity and potential require strong, direct, overall Command from the onset. With this type situation the officer will assume a Command position outside and maintain the position until the situation has been

4. **Decision** (Based upon analysis of items 1,2,3)(cont.)

stabilized or Command is transferred.

At incidents where a chief officer is first arriving, his efforts will automatically be directed towards establishing a command post and carrying out previously listed responsibilities.

D. Select tactics

5. **Plan of Operation**

A. Issue tactical assignments
B. Coordinate activities
C. Evaluate results
D. Alter activities as necessary

Once Command is established, all units must refer to that function as "Command", regardless of who is the Incident Commander at any given moment.

Once Command is established, no company shall go to work without being given an assignment by Command. The exception shall be where life is in jeopardy, or other serious situation that must be attended to immediately.

When a company goes to work due to the above exception, Command shall be notified immediately.

Personnel in command of first alarm assignments always have the option of having companies use the standard company location assignments, if those assignments will place companies at the desired location while investigating the situation at an incident.

COMMUNICATIONS

In accordance with the philosophy of the Incident Command System as adopted by the Fire Department, the value of effective yet simple communications procedures is clearly recognized. It is further recognized that effective incident scene communications is the responsibility of **COMMAND** and goes hand in hand with the sound execution of **COMMAND** functions. The dispatching function, therefore, should be considered an integral part of the Incident Commander's resource pool.

The following procedures shall be used for communications on any and all incidents requiring the response of two (2) or more units, regardless of the type of units:

1. The first individual addressing the **COMMAND** function shall do so by identifying the incident. This procedure is implemented to benefit both on-scene personnel and dispatcher by clearly separating each incident from any other incident which may be simultaneously occurring. Addressing the **COMMAND** function without identifying that **COMMAND** is an inappropriate procedure.

Example A: Dwelling fire at 817 Circuit St.

"E-1 is passing/assuming Circuit St. Command."

Example B: Building fire at University Hospital, Holmes St.

"E-3 is passing/assuming Holmes St. Command"

"C-2 is assuming Hospital Command."

Example C: Motor Vehicle Accident, 300 King St.

"Rescue-1 is assuming King St. Command."

COMMUNICATIONS (cont.)

The terminology for incident identification shall be left to the discretion of the Incident Commander. However, caution should be exercised so as not to use identifiers which might not clearly separate one incident from another.

2. Internal incident communications may be directed to/from any element on location in accordance with the appropriate procedures. Face to face communications is always preferable. However, radio communications directed to/from established functional assignments shall use the appropriate functional title.

Example 1: Communications directed to/from the Incident Commander shall address "(ID) **COMMAND**", not "Batt-1", "Chief-1", "Lt-26", etc.

Example 2: Communications directed to/from the individual assigned responsibility for all activities on the 1st floor of a structure shall address "**Division-1**", not "Chief-12", "Lt-18", "FF-T-26", etc.

3. In order to keep incident scene communications to a minimum, the **"COMMAND BY EXCEPTION"** principle should be utilized. This means that radio traffic directed to immediate supervisors should be limited as much as practical to:

   A. Announcing the completion of an assigned objective.
   B. Announcing when an assigned objective cannot be met.
   C. Announcing identified safety problems.
   D. Announcing the need for additional resources to accomplish an assigned objective.
   E. Announcing other emergency or absolutely necessary information.

4. The Incident Commander shall be responsible for cancelling assignments or placing units available.

A. Brief Initial Report:

A primary role of the 1st arriving Incident Commander is to establish strategy & tactics. A primary role of the additional responding units is to support the Incident Commander's strategy & tactics by accomplishing specifically assigned tactical objectives. In order for this cooperation to work effectively it is important for the support units to have as close an idea as to what is occurring as does the Incident Commander. Therefore, the Incident Commander must act as the "TV Camera" for the other units. His or her initial report of the situation must be concise, complete, and accurate.

A Brief Initial Report (BIR) shall be required on any and all incidents involving a response of multiple units regardless of the types of units. This procedure is particularly important where one or more units initially report to the scene and all other units stage away from the scene. The following elements, in the specific order listed, shall be included in the initial report of any and all incidents when such reports are required.

The first arriving member shall transmit a BRIEF initial radio report to dispatch including the following:

1. Unit identification on the scene and announcement confirming assumption of **COMMAND**.

2. Brief incident description: Building type, commercial, residential; Vehicular Accident; Hazardous Material leak, spill, fire; Rescue Situation.

3. Obvious fire condition: Nothing Showing, Smoke Showing, Working Fire, Fully Involved.

4. Action taken (brief description).

An example can not be provided for every type of situation. However, the ones provided should serve well to illustrate the appropriateness of the format. The unit assignments illustrated in these examples should not be interpreted as required tactical objectives, nor should they be interpreted as necessary unit assignments. Such matters are at the discretion of the Incident Commander and units not assigned specific tactical objectives by **COMMAND** should be staged.

A. Brief Initial Report: (cont.)

Example A: Single-story dwelling fire

"E-1 to Fire Alarm," "E-1 is off at the scene, nothing showing."

"E-1 to Fire Alarm," "Investigating further."

"E-1 is Command."

Example B: Car fire

"E-1 to Fire Alarm," "Off at the scene, motor vehicle fully involved."

"E-1 is Command."

Example C: Motor Vehicle Accident w/entrapment

"E-1 to Fire Alarm," "Off at the scene, report to follow."

"E-1 to Fire Alarm," "Two injuries w/entrapment." "Dispatch an Ambulance and Rescue w/Jaws of Life."

"E-1 is Command."

B. Brief Progress Report:

A Brief Progress Report (BPR) is essential to any ongoing incident in that it keeps all concerned parties abreast of a dynamic situation. It is designed to provide information which:

1. Updates dispatcher as to the situation status.
2. Updates chief officers.
3. Updates responding, staged, or "off duty" personnel.
4. Permits continuous documentation of an ongoing incident.

A Brief Progress Report (BPR) shall be required on any and all incidents which initially required a Brief Initial Report (BIR), except as noted in the examples. The 1st BPR shall be transmitted at approximately 10 minutes after the BIR. Thereafter, BPR's shall be transmitted at intervals deemed appropriate by the Incident Commander, but in no case should an interval exceed 30 minutes. The BPR shall consist of the following information:

1. Description of the current situation (Example: Structure type, size, corrected address, etc.)
2. Description of current tactical objectives.
3. Status of resource needs.

An example can not be provided for every type of situation. However, the ones provided should serve well to illustrate the appropriateness of the format.

Examples:

A. <u>Multiple units responding to a 2-story dwelling fire</u>

"Command to Fire Alarm"

"We have a 2 1/2-story wood frame dwelling w/heavy fire on floor 1 extending to floor 2."

"Primary search completed"

"All companies committed, Request a 2nd Alarm"

B. Brief Progress Report: (cont.)

B. Multiple units responding to an M.V.A. w/reported entrapment

"Command to Fire Alarm"

"Victims removed from motor vehicle" "EMT's presently treating same" "A-1 will be transporting 2 to South Shore Hospital."

"Rescue-1 in service at scene, E-1, out of service until vehicle is removed."

STAGING

The objective of the Staging Procedure is to provide a standard system of initial placement for responding apparatus, manpower, and equipment prior to assignment at incidents.

Effective utilization of this procedure:

* Will prevent excessive apparatus congestion at the scene.
* Will allow time for Command to evaluate conditions prior to assigning companies.
* Places apparatus in an uncommitted location close to the immediate scene to facilitate more effective assignment by Command.
* Produces more effective communications by virtue of reducing radio traffic during the critical initial stages of fire operations.
* Allows Command to formulate and implement a plan without undue confusion and pressure.

Staging will involve two levels: Level I and Level II.

Support staff and personal vehicles will not stage on arrival at an incident. These vehicles will be parked in a location outside the operational area where they will not restrict access to the scene.

A. Level I Staging:

This procedure will automatically apply to all full assignment responses and will involve:

1. The assigned Chief Officer will respond directly to the scene. Placement should provide:

   + Maximum visibility for the IC
   + Views of at least two sides of Fire Building
   + Located to be easily identified
   + Outside of the danger area

2. The first engine company will respond directly to the scene and position to best advantage.

   OFFENSIVE:
   - Short of or beyond the fire building
   - For rapid line advancement
   - Without blocking access
   - In remote, narrow areas, lay in a feed line/rural hitch from main access road.

   DEFENSIVE:
   - In a safe location
   - With a strong water supply
   - For effective master stream operation

3. The first ladder company will respond directly to the scene and will place themselves to best advantage.

   OFFENSIVE:
   - Best location for aerial operations
   - For removal of victims
   - For ventilation
   - To assist in rescue and fire control

   DEFENSIVE:
   - In a safe location
   - For operation of elevated master streams
   - To protect exposures
   - To stop forward progress of the fire
   - Make portable equipment readily available

All other units (regardless of alarm) will stage in their direction of travel, uncommitted, approximately one block from the scene until assigned by command or staged according to adopted pre-fire plan. A position providing a maximum of possible tactical options with regard to access, direction of travel, water supply, etc., should be selected.

A. Level I Staging: (cont.)

Generally, the second due engine company function will be to assure an adequate water supply for the attack engine. In urban areas, this company must ensure the best possible hydrant supply to the attack engine. In rural situations, the second due engine will pump the rural hitch if applicable, setting up folding tanks and/or use a nurse tanker for supply.

Staged companies or units will, in normal response situations, report company number, staged and their location "(Engine One staged corner Main and Elm Streets.)" It may be necessary to be more specific when reporting staged positions. An acknowledgment is not necessary from either dispatch or Command. Staged companies will stay off the air until orders are received from Command. After a reasonable amount of time staged companies, if forgotten by Command, will contact Command and re-advise of their staged status.

These staging procedures attempt to reduce radio traffic, but in no way should reduce effective communications or the initiative of officers to communicate. If staged companies observe critical tactical needs they will advise Command of these conditions and their actions. Companies should continue response to the scene until a company reports on the scene. When a first arriving company reports on the scene, Level I Staging will begin within these guidelines.

If a company which would normally be first due to the incident is out of their district and the arrival order is uncertain, the officer in charge of that company will communicate their location to dispatch. Company officers will utilize radio communications to coordinate possible simultaneous first arrival of two companies. It will be the responsibility of dispatch to acknowledge the arrival of the first arriving company and confirm that Command has been established.

Pre-fire planning will identify exceptions to Level I Staging with regard to the special functions that must be performed in that particular occupancy. In the absence of such assignments, regular Level I Staging procedures will automatically apply.

B. Level II Staging:

Level II Staging will relate to complex-type incidents requiring an on-scene reserve of companies and will involve formal staging in an area designated by Command. The Staging Area should be away from the Command Post and from the emergency scene in order to provide adequate space for assembly and for safe and effective apparatus movement.

When Command announces a Level II Staging Area, all responding companies will report to and remain in the Staging Area until assigned. When changing to Level II, Command will announce: "Level II Staging" and announce the approximate location of the staging area. Level II Staging will automatically supersede Level I Staging. Companies already staged in Level I will remain in Level I until assigned either to the incident or to the Level II Staging Area.

When calling for additional help, Command should consider Level II Staging at the time of the call. This will be more efficient than calling for Level II Staging while units are enroute.

Command may designate a Staging Area and Staging Officer who will be responsible for the activities outlined in this directive. In the absence of such an assignment, the first company officer to arrive at the Staging Area will automatically become the Staging Officer, will notify Command of arrival and will assume supervision of the staging area.

Ladder/Truck Companies, due to their limited numbers will not be assigned these responsibilities. If a Ladder/Truck Company is first to arrive at the scene they will automatically transfer supervision to the first arriving Engine Company Officer.

The radio designation for the Staging Officer will be: "STAGING". All communications involving Staging will be between Staging and Command (or Staging and Operations Level if established). All responding companies will stay off the air, respond directly to the designated staging area, and report (in person) to the Staging Officer. Company Officers in staging will stand by their unit with CREW INTACT and warning lights turned OFF. The Staging Officers unit will keep warning lights ON to designate the location of the staging command post.

When requested by Command, the Staging Officer will verbally assign companies to report to specific sectors, telling them where and to whom to report. He will then advise Command of the specific unit(s) assigned. The sector officer may then communicate with the

B. Level II Staging: (cont.)

company by radio.

The Staging Officer will communicate directly with the Fire Department Dispatch Office for additional units to be dispatched to the Staging Area. Another radio channel will be utilized if available.

The Staging Officer will also be responsible for the following functions:

A. Coordinate with the police department to block streets, intersections and other access required for the staging area.

B. Insure that all apparatus is parked in an appropriate manner.

C. Maintain a log of companies available in the Staging Area and inventory all specialized equipment that might be required at the scene.

D. Review resources in the Staging Area and coordinate the request for any additional resources with Command and the Fire Department Dispatch Office.

E. To assume a position that is visible and accessible to incoming and staged companies. (Accomplished by leaving red warning lights operating).

F. In some cases, the Staging Officer may have to indicate the best direction of response and routing for responding companies to get to the staging area.

AMBULANCE RESPONSES

Ambulances responding to incidents where Level II Staging has been established will be dispatched to the Staging Area. The Staging Officer will acknowledge the arrival of the ambulances with the Fire Department Dispatch Office and will give instructions to the ambulance personnel as requested by Command.

UNCOMMITTED APPARATUS

At some instances, such as a major emergency, it may be necessary to designate a parking area for uncommitted apparatus near the incident scene. This would be necessary when the staging area is too far from the incident to facilitate hand-carrying

B. Level II Staging: (cont.)

needed equipment to the incident site. In such cases, the Staging Officer shall designate the parking site and instruct each company of its location before they leave staging. The parking area should be close enough to the incident site to allow easy transfer of needed equipment to the scene. The parking area should in no way impede necessary access for ambulances or other units to the incident area.

Unless otherwise instructed by Command, Staging will advise Command when the level of resources at the staging area is reduced to one engine. Command will make a decision whether to call for additional units.

SECTORING

ICS organizational structure is based upon incident complexity, rather than incident size.

The Incident Commander (IC) continually evaluates the situation. As the situation changes, so must the IC's strategic goals, tactical objectives, and subsequent action plan.

EXAMPLE: Initial Fire Department response to a one room fire, 1 1/2 story single family home.

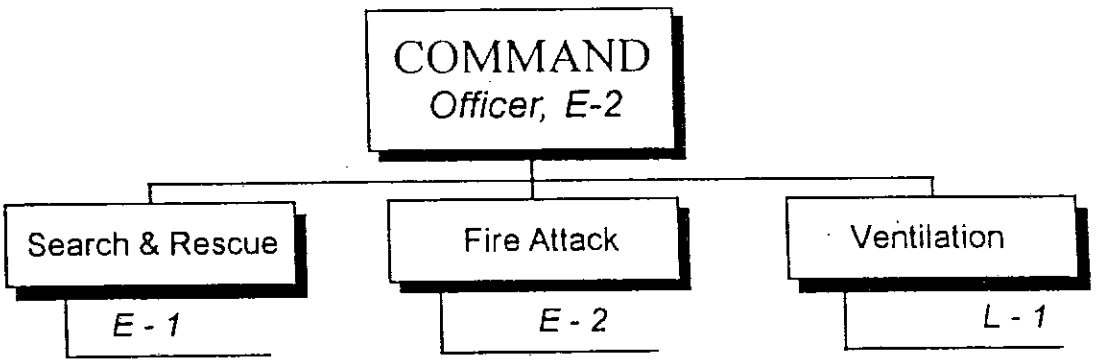

Incident priorities include:

Life Safety
Incident Control
Property Conservation

Strategic goals include:

Search for and rescue occupants
Confine and extinguish fire
Provide for ventilation

An IC organizational structure, as noted above, will effectively address 90-95% of all incidents.

As the complexity of an incident escalates, so do the goals and objectives which must be met.

Additional resources must be deployed without complicating the incident command organization or the IC's effective span of control (5).

For the purpose of coordinating operations, additional assignments are sectored. Sectoring is the art of dividing an incident into manageable parts.

A. The Advantages of Sectoring:

The sector system provides direction and support to the operating units so that they may achieve their objectives safely and efficiently.

Utilizing sectors provides the following advantages:

* *Reduces IC span of control*-divides the fireground into more manageable units.

* *Creates more effective fireground communications*-permits the IC to exchange information with a limited number of groups and individuals. This reduces overall radio traffic by allowing companies and Sector Officers to communicate face-to-face, freeing the radio for more critical IC-to-Sector Officer interaction. Communications necessarily become a reflection of the organization; effective communications result from effective organization.

* *Provides a standard system to divide large geographical incidents into effectively sized units*-Sector Officers become evaluation and report agents, eliminating the need for the IC to orbit the entire fire site and allowing him to concentrate on strategy from one position.

* *Provides an array of major support functions*-these are to be selected and assigned according to the particular needs of each situation. The execution and details of these specific operations become the responsibility of the Sector Officers, not Command.

* *Improves firefighter safety*-allows each Sector Officer to maintain control of the position and function of his companies at all times. Sector Officers concentrate on their assigned areas and are in a position to move personnel based on the IC's decisions.

The use of sectors gives the IC an ongoing capability to manage any type of incident he may encounter using the same management system, whether it is a fire, major EMS incident, earthquake, structural collapse, falling meteor, or any combination of the above.

Regular use of sectoring also provides organized "practice" sessions for the players. They have the opportunity to work on small-scale, everyday incidents in preparation for larger, less frequent situations.

B. Assigning Sectors:

Sectors are assigned based on the following factors:

* *Early fire stage overload*-when the number of assigned operating companies threaten to overload the IC's ability to command. Direct control should be delegated to Sector Officers before the IC's ability to cope is exceeded.

* *Major operation prediction*-when the IC forecasts that the situation will become a major operation, soon exceeding his span of control. The faster he predicts the build-up, the faster the correct organization can be in place to avoid playing "catch-up".

* *Isolated tactical positions*-when fire companies are operating in tactical positions over which the IC has little or no control (i.e., complex, interior operations or on a side of the fire he cannot see.)

* *Dangerous conditions*-when the IC must maintain close control over operating companies faced with unusually dangerous conditions. Scenarios involving unsafe structural conditions, hazardous materials, quickly changing conditions, or "one way in-one way out" problems require close supervision and control.

The fireground organization begins with the deployment of the first-arriving units. A regular management system will typically assign companies to key operating and support positions. Usually the first-arriving unit, generally an engine company, will be assigned the most critical tactical position. Later-arriving units will support and reinforce that position.

The combination of this first-arriving engine company,working together with an additional engine company and support company (ladder or rescue squad) can become an *Attack Team* assigned to a specific task or area. The initial-arriving Company Officer will usually become the team leader. When a Command Officer arrives and assumes command, the attack team would generally be given a sector designation. As an operating sector, it becomes an integral part of the fireground organization.

This standard resource build-up provides a regular framework for escalation. When the fire is stabilized, the escalation stops. The whole escalation process is continually moving toward the development of the correct number and types of sectors for the incident.

B. Assigning Sectors: (cont.)

In order for this system to work there can only be one "playbook" for establishing sectors used by everyone on the fireground. This playbook must be learned and remembered. The IC and the firefighter should be equally prepared to use whatever sectoring they need and to escalate the system to disaster management proportions when necessary.

Since sectors are assigned based on the needs of a particular situation, sector jobs should be able to be performed by anyone on the fireground, within the limitations of their apparatus, equipment, and special expertise. This includes the assignment of officers as Sector Officers, wherever and whenever needed. The IC can now develop an effective organization from the beginning with any cast of command and company characters.

C. Sector Officers:

The Sector Officer should be briefed on the overall strategy and tactical objective of his area or functional assignment. Although the number of units assigned to an individual sector will depend upon needs and conditions, three to five companies are a practical span of control for most situations. Part of the IC's job is to maintain an awareness of the number of companies assigned to each sector and the particular capabilities of that Sector Officer.

The IC serves as the resource allocator for each incident and, once sectors are established, assigns companies based on resource requests from the Sector Officers. These companies will come from the Level I or Level II staging areas.

Once a company has been assigned to a sector, it is the responsibility of that Sector Officer to get the company into action. In turn, Company Officers will supervise their own crews in performing specific tasks. Company Officers communicate directly with their Sector Officers to describe work progress, resource needs, and other critical factors.

The recommendation to establish sectors should be made by anyone who identifies conditions or positions that require sector operation. Each sector must be commanded by a Sector Officer who may be a Chief, Company Officer, or even a qualified firefighter.

Initial sector command is usually given to a Company Officer who is in a tactical position first. This requires him to act as both a Sector Officer and Company Officer. The IC should attempt to relieve these officers with later-arriving Command Officers

C. Sectoring Officers: (cont.)

whenever possible, using regular transfer procedures.

Sector Officers are responsible for the following basic functions:

* Directly supervise work in the sector.
* Monitor personnel safety and welfare.
* Redirect sector activities as required.
* Request additional resources from the IC as required.
* Integrate and coordinate actions with other sectors as required.
* Advise the IC of situation status, changing conditions, progress and exception reports.
* Decommit companies as operations are completed.

When a company is assigned from Staging to an operating sector, it will be told to what sector and which Sector Officer it is to report. The Sector Officer will be informed by Command as to which particular companies or units have been assigned to his sector. It then becomes the responsibility of the Sector Officer to contact the company by radio or in person to transmit instructions on the specific actions required.

The primary function of the Company Officer working within a sector is to directly supervise the operation of his crew while they perform assigned tasks. As with Sector Officers, they too must advise their supervisor (in this case the Sector Officer) of work progress and, if necessary, additional resources required.

Companies working within a sector should communicate directly with their Sector Officer using non-radio modes whenever possible. The radio will be used for "Sector Officer to Sector Officer" and "Sector Officer to Command" transmissions. Obviously, this plan does not apply to critical, tactical messages or "Emergency Traffic," which can be initiated by anyone at any time.

D. Sector Classification:

There are two (2) methods of sectoring:

Geographic - the dividing of areas through the use of <u>Divisions</u>.

Functional - the dividing of an incident by specific task to be accomplished through the use of <u>Groups</u> or individuals.

D. Sector Classification: (cont.)

Divisions and Groups operate at the same level.

DIVISIONS

For the purpose of coordinating operations, the following procedure shall be used when geographically sectoring an emergency incident.

Structures:

1. The exterior walls of any structure shall be designated as Divisions and shall be identified in order by going clockwise beginning with Division A.

2. Division A shall be defined as that side containing the street address. Under unusual circumstances the Incident Commander may designated any side as Division A. All other sides shall be identified in accordance with Item #1.

3. Exposures shall be identified by the side of the involved structure to which it is exposed. Example: The exposure facing Division C of an involved structure would be identified as Exposure C.

4. The interior floor area of a structure shall be known as a Division and shall be identified by its floor number. Example: The 5th floor of a structure would be identified as Division 5. A single story structure would only have a Division 1.

5. The roof shall be designated Roof Division.

6. The basement shall be designated Basement Division.

7. Unusual areas such as multiple sub-basements, mezzanines, etc. shall be designated as Divisions but may be identified at the Incident Commander's discretion.

8. Personnel assigned to supervise a geographic area shall be designated as, and identified by, that geographic area. Example: The supervisor of the 5th floor of a structure would be identified as Division 5. The supervisor of the interior of a single story structure would be identified as Division 1.

D. Sector Classification: (cont.)

ABCD Sectoring System

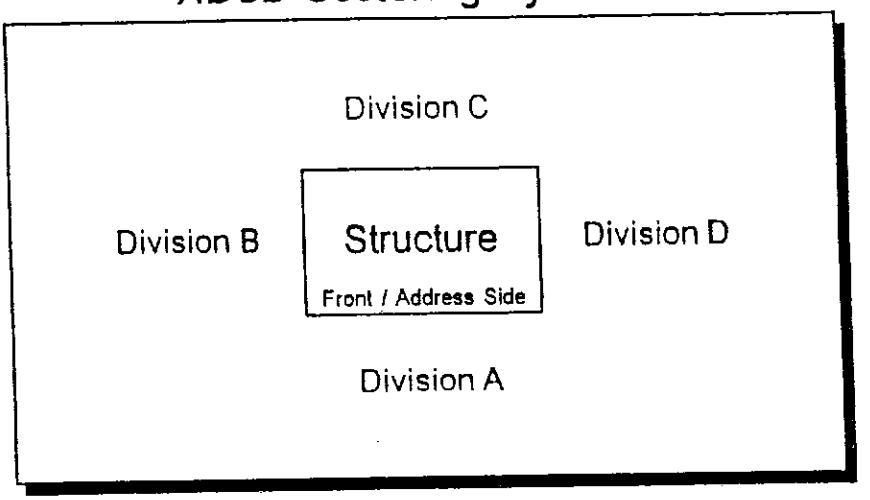

Exposure Sectoring System

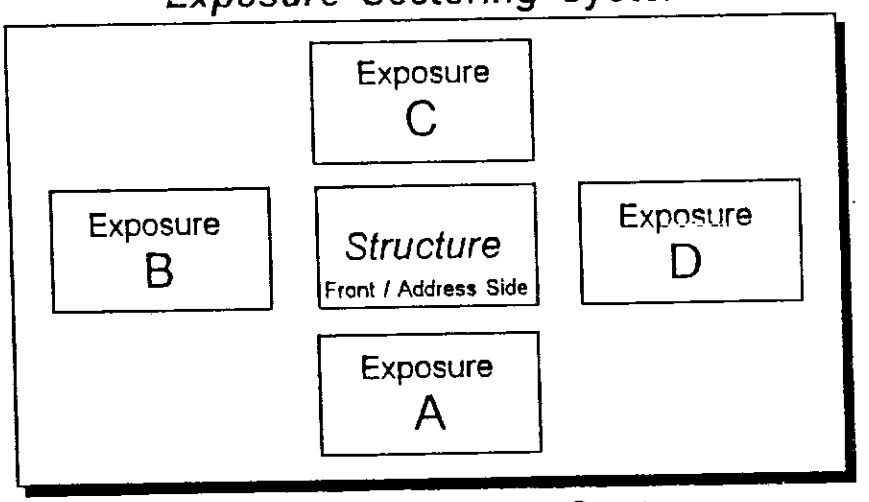

Multi-Story Sectoring System

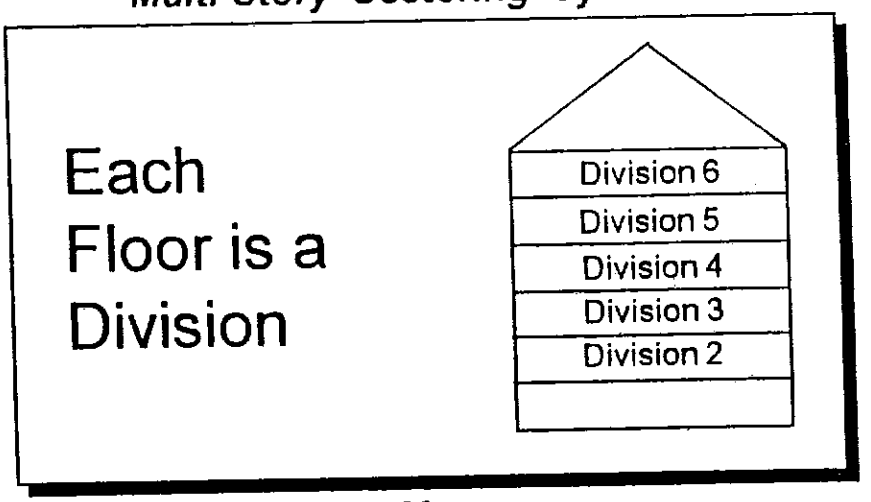

D. Sector Classification: (cont.)

Open Areas:

1. Geographic areas necessary to maintain command and control should be established using natural dividing lines such as road, creeks, railroad beds, etc., whenever possible.

2. These established areas shall be designated as Divisions and shall be identified alphabetically. Example: A HazMat incident divided into three (3) separate areas of control would be designated Division A, Division B, & Division C.

3. Personnel assigned to supervise a geographic area shall be designated as, and identified by, that geographic area. Example: The supervisor of the area designated as Division A would be identified as Division A.

Examples of Open Area Sectoring:

Example 1: **HazMat Incident**

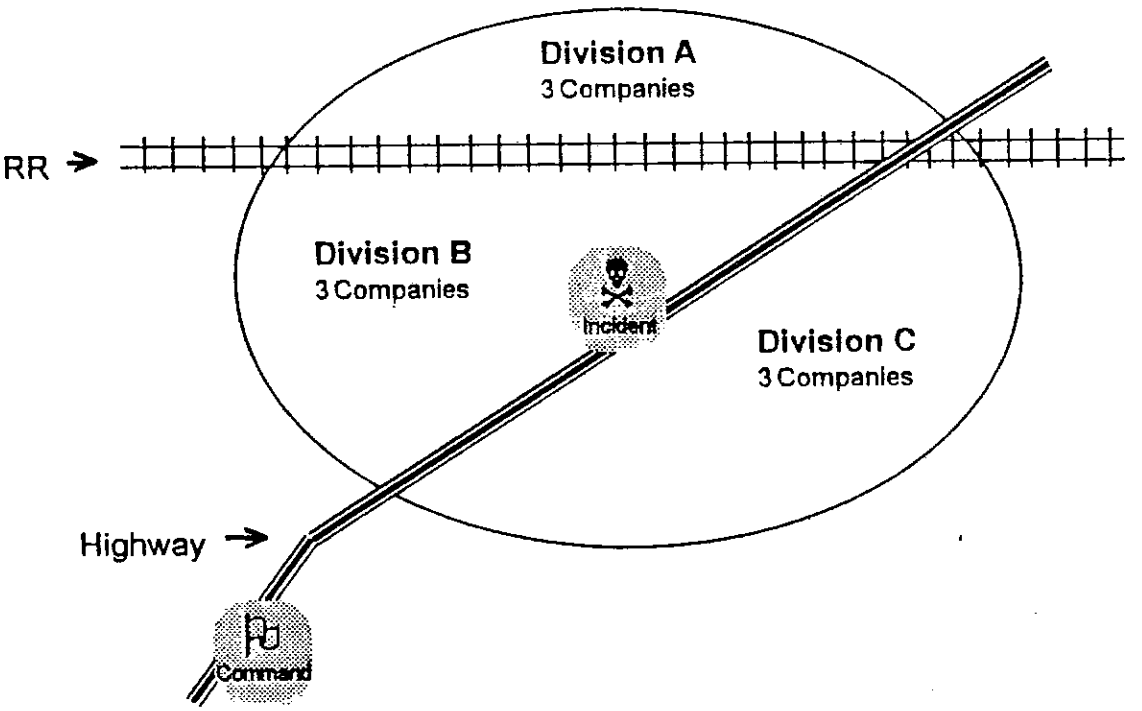

D. Sector Classification: (cont.)

Example 2: Brush Fire

Division A - Origin (Heel)
Division B - Left Flank
Division C - Head Fire/Exposures
Division D - Right Flank

Each area can be further broken down into smaller quadrants, if necessary. Power lines, roads, ridges, etc. can be used as landmarks.

The Officer in charge of a side, can have Unit/Group leaders reporting to him; in turn, he would report to the IC.

Brush Fire Sectoring

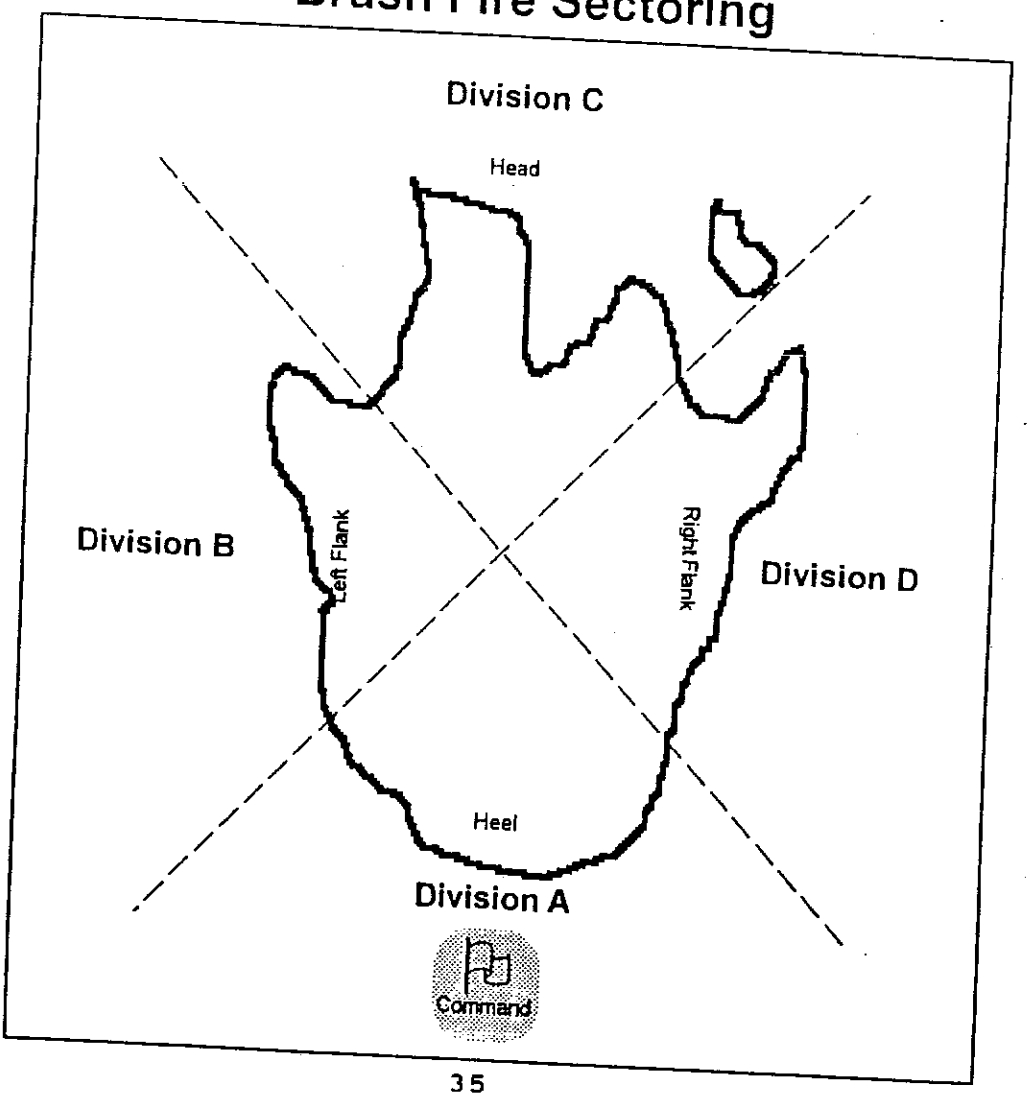

D. Sector Classification: (cont.)

GROUPS

Functional groups are assigned to perform specific tasks or activities which do not necessarily coincide with geographical sectors. The need for these groups may be easily identified by the geographical sector officers.

On any given incident, the IC will pick and choose the sector functions he needs using the combination of geographical and functional sectors that best apply. This combination will probably be different for each alarm.

Generally, the IC will concentrate on the geographic sectors directly involved in firefighting. The majority of functional sectors operate in a support posture on a more routine and automatic basis. Some functional sectors are routinely operated by a single officer, e.g., Public Information Officer (PIO), Safety and Staging.

When a number of active tactical sectors are being directed by the IC, he may choose to delegate management of these functional sectors to command post staff who will communicate with them on a separate frequency. This ongoing delegation reinforces the reality that the IC must unload routine details so he can concentrate on critical decisions.

Standard support function areas (groups) include:

* Safety
* Staging
* Public Information
* Roof
* Ventilation
* Resource
* Access Control (Lobby Control)
* Water Supply
* Police Liaison
* Rehabilitation
* Welfare
* Medical
    * Extrication
    * Treatment
    * Transportation
* Hazard

D. Sector Classification: (cont.)

The following examples are representative of "groups" assigned specific fireground or other incident tasks:

STAGING

The Staging Sector assists the IC with the location, establishment and operation of the Level II Staging Area. A part of this duty is the coordination with police or the Police Liaison Sector to provide for traffic and access control. This sector is also responsible for the inventory and management of regular and specialized equipment in the Staging Area.

The Staging Sector Officer must be visible and accessible. He advises the IC of equipment and resources available, assigns specific companies to the IC's requests, and assists these companies in responding to their assignments (routing, direction, access, etc.). This sector may be ordered to communicate directly with the dispatcher to restock companies or equipment that has been used by the IC.

ROOF/VENTILATION

The roof of a burning building is a major tactical operating area during most offensive attacks. The Roof Sector is responsible for a significant geographical area (the top of the fire building), but it is also responsible for several specialized functions. The first fire personnel to reach the roof, generally from a ladder company, should establish a Roof Sector and make an initial evaluation of its structural stability. An unsafe roof is an early and critical signal of defensive conditions. The Roof Sector should advise the IC of the following information:

* Roof Structure
* Structural conditions
* Smoke and fire conditions
* Fire wall location and arrangement
* Location of heavy roof objects
* Description of roof actions

The Roof Sector is responsible for the continuous evaluation of conditions, reporting those conditions to the IC, directing ventilation, coordinating roof operations with the Interior Sector, and managing the safety of those involved above the fire. Once ventilation is accomplished, the roof should be cleared and, usually, the sector reassigned.

D. Sector Classification: (cont.)

WATER SUPPLY

The Water Supply Sector represents a concentrated effort directed toward providing a continuous, sufficient water supply. The Sector Officer uses water supply and area maps to first survey the *hydraulic profile* (needed gpm reserve) of the immediate fire area and then to scour for alternate supply sources. Creativity is often the order of the day for Water Supply. The use of portable pumps, large diameter hose, tanker shuttles, and relay pumping operations require reconnaissance to collect all the necessary elements, coordination to set up, and support to operate. Water supply problems are potentially devastating to the IC-it is important that he plan early for their effective management.

REHABILITATION (REHAB)

Long, severe fire operations always affect the physical condition of firefighters. The Rehab Sector provides an organized response to the safety and welfare of all fireground personnel. It should be located in an area remote from the fireground to allow firefighters to safely remove their protective equipment. When faced with severe weather conditions, the Sector Officer should search for a protected area or, when necessary, bring one to the scene.

Ideally, the Rehab Sector may contain a medical unit, lighting, an air supply unit, and canteen service. Firefighting crews should be cycled through the sector for medical evaluation, fluids, food, and rest. Crews should be assigned intact and stay together in Rehab until they are ready to be reassigned to new tactical sectors or released from the scene.

All operating sectors should maintain an ongoing awareness of the condition of their personnel and use the Rehab Sector to combat excessive fatigue and exhaustion. It is important that the Rehab Officer maintain a personnel log and coordinate rotation crews with the IC and other sectors.

D. Sector Classification: (cont.)

POLICE LIAISON

The majority of large or complex fires require some interaction between police and fire personnel at the Command level. To be most effective, a police supervisor should report to the Command Post and work with the Police Liaison Officer throughout the incident. This sector will coordinate all interaction including:

* Traffic control
* Crowd control
* Evacuation
* Fatalities
* Crime scenes
* Persons interfering with fire department operations

Once the specific parameters are determined, the police supervisor will assign the details to his subordinates. The control of people, vehicles, and unusual situations, particularly those involving violence, are not in the fire department's job description. (That's why police carry guns.)

MEDICAL

The fire service is in the most advantageous First Responder position for medical emergencies, particularly those involving many victims. A planned set of Patient Management Sectors allows the IC to use the overall fireground management system to involve fire companies in an EMS response and integrate those efforts into the existing medical system. These sectors should be routinely established at fires, vehicle accidents, hazardous materials incidents, cave-ins, or any other scenario that produces injuries or medical emergencies. Patient flow is a primary consideration for these tasks.

Medical Sectors may include the following patient management sectors:

* *Extrication*-established in multi-patient incidents requiring the extrication of trapped victims. It is responsible for locating, removing, and delivering patients to the treatment area or areas along with the necessary emergency care required for stabilization. The Extrication Sector Officer determines the number, location, and condition of the patients, determines triage requirements, and requests and manages the needed resources. He directly supervises extrication efforts

D. Sector Classification: (cont.)

in the area.

NOTE-Extrication is an area where rescue and medical overlap. Clear SOPs and a single command system are required to produce a smooth operation and reduce bad feelings as to who is in charge.

* *Treatment*-initiated to provide for complete field triage and patient stabilization. This sector offers continuing care until the patients can be transferred and transported to a medical facility. Its physical location should be away from dangerous conditions, in an area readily accessible for patient entry and ambulance loading. The FGC should quickly move to establish a Treatment Sector whenever the presence of multiple victims is predictable or identified. The function of the Treatment Sector Officer is to supervise the categorization of patients, manage the resources providing treatment, and to coordinate with other sectors and the FGC.

* *Transportation*-the final segment in the patient flow process. It is responsible for the management of ambulances and the allocation of patients to appropriate medical facilities. The Transportation Sector Officer is required to call for the necessary ambulances, set up an ambulance staging area close to the Treatment Sector, determine hospital intake status via Alarm, and coordinate patient transport with "Treatment." Large numbers of patients produce large transportation efforts. Management of this sector requires strong control and adequate resources.

D. Sector Classification: (cont.)

Example - Sectoring:

Fire department response/assignment - 2 1/2 story wood frame single family home - reported fire on 1st floor.

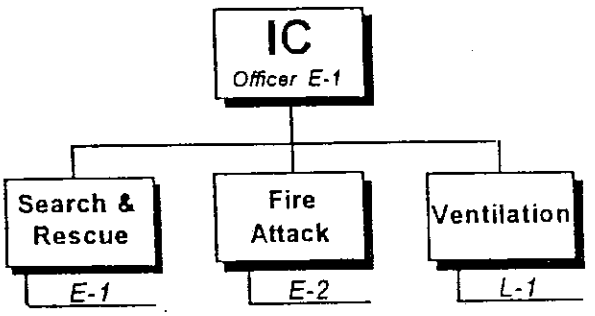

Response - 1st Alarm
Assignment - 1st Alarm

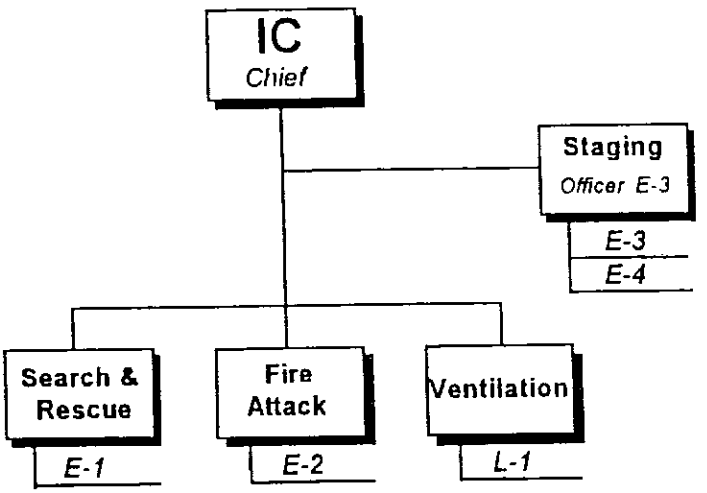

Response - 2nd Alarm

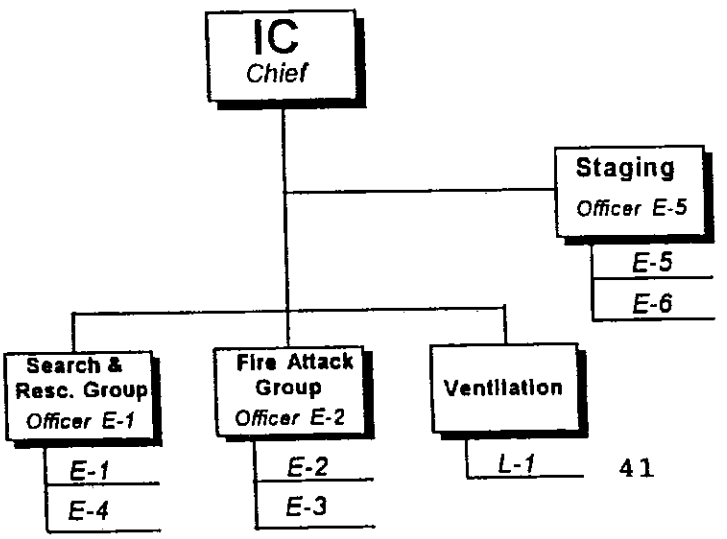

Assignment - 2nd Alarm
Response - 3rd Alarm

D. Sector Classification: (cont.)

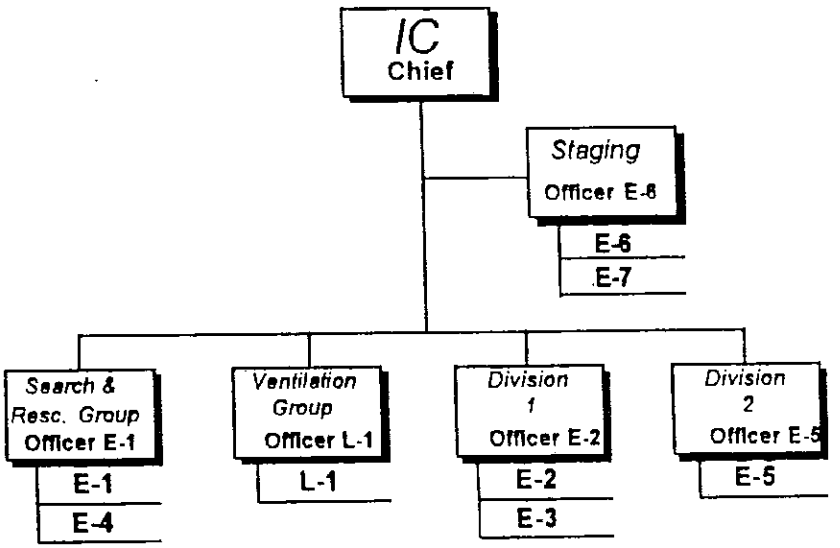

Assignment - 3rd Alarm
Reponse - 4th Alarm

COMMAND STAFF AND SUPPORT FUNCTIONS

A. Introduction:

Total I.C.S. management involves more than "putting water on a fire". Periodically the IC (Incident Commander) will face complex incidents requiring resources, and emergency scene coordination and control which exceed the scope of those regularly encountered.

The establishment of a command post, command staff and various support functions represent a management "tool box" available to the IC to effectively manage the complex incident. The key is to match the tool(s) to the job.

Incident examples include:

* Multiple alarm fires
* High rise fires
* Hazardous materials incidents
* MCI's (Mass. Casualty Incidents)
* Natural disasters
* Major evacuations
* Searches

B. Organizational Chart:

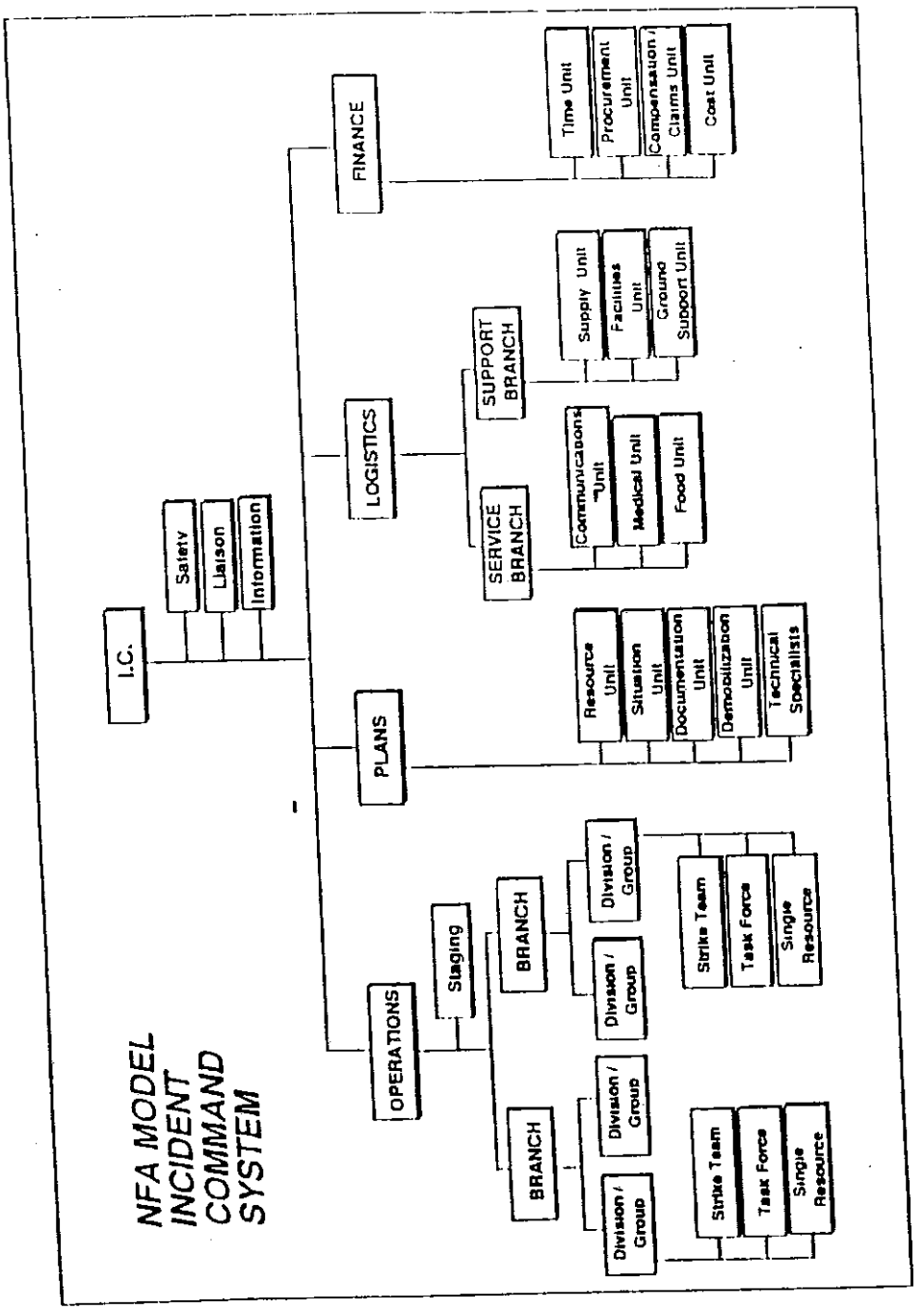

C. The Command Post:

The standard command position for the Incident Commander will be a stationary one inside of a command vehicle or a piece of fire apparatus which is then called the "command post." It should be situated in a predictable and conspicuous location which affords the IC a good view of the fire building and surrounding area. When possible, it should be in front of the fire and should NEVER interfere with apparatus movement. Ideally, it would also offer a view of two sides of the fire building.

The entire incident command system revolves around the rapid establishment of this command post. Utilizing long-term, mobile command or multiple command posts defeats the operation. In the cases where a company-level officer establishes a mobile command, he should upgrade to a stationary command as soon as possible using the standard procedures.

The IC must discipline himself to remain at the command post and manage the incident from one basic position. The system is designed to support and assist the centrally located IC. A consistent command post also eliminates the too-common question, "Where's the Chief?" Now, everyone on the fireground knows where the IC is, how to contact him by radio, and generally what he is doing.

ADVANTAGES OF THE COMMAND POST

When a standard position inside a particular vehicle is assumed by the IC, it becomes his *"field office"* and gives him the following advantages:

* Stationary position
* A quiet place in which to think and decide
* A vantage point from which to see
* Inside lighting
* A place to write and record
* More powerful radios
* Reference and preplanning material
* Protection from the weather
* Space for staff
* Computers (in some systems)

C. The Command Post: (cont.)

Very mobile commanders must adjust to a fixed command post.

Very mobile commanders may require a period of adjustment to the new experience of being tethered to the command post, particularly after their rough-and-ready days of moving all over the fireground to look, check, order, and verify in person. Everyone in the "new and improved" system should support and assist his efforts to "unlearn" the old habit of orbiting the fireground. Improved command and control experiences will also reinforce the stationary IC approach.

D. Command Staff Positions:

Command Staff Positions include:

* Safety Officer
* Information Officer
* Liaison Officer

These three positions: Information, Liaison, and Safety are command staff positions, and should not be confused with the four functions: Operations, Logistics, Planning, and Finance, that will be considered next.

ICS ORGANIZATION CHART

COMMAND STAFF

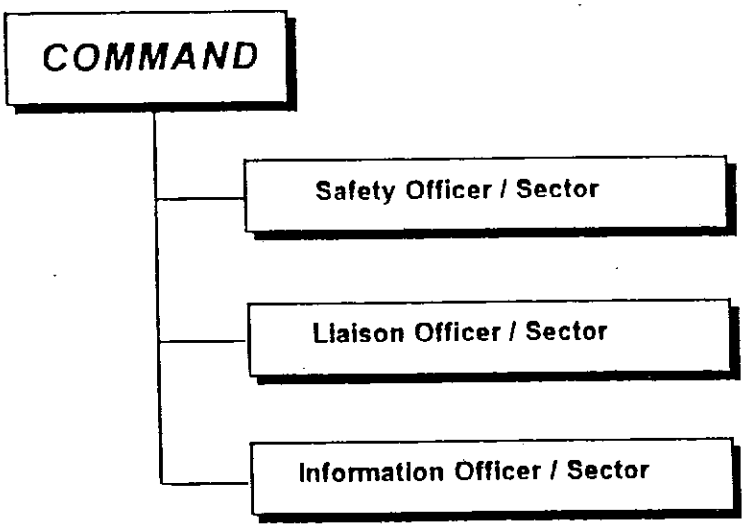

1. Sectors - Safety:

The Safety Officer, a member of the command staff, is responsible for monitoring and assessing hazardous and unsafe situations and developing measures for assuring personnel safety. Although the safety officer may exercise emergency authority to stop or prevent unsafe acts when immediate action is required, the officer will generally correct unsafe acts or conditions through the regular line of authority.

Command has the responsibility to recognize situations requiring the implementation of a Safety Officer and to confirm the response of the department Safety Officer.

At significant incidents and special operations incidents, command shall assign qualified personnel with the specific authority and responsibility to evaluate hazards and provide direction with respect to the safety of operations. When established, these personnel shall be referred to as the "Safety Group".

The recognition of situations which present an unusual hazard to personnel and the proper response to those situations is of critical importance at all fire department operations. A Safety Group is described in this guideline which establishes a standard system for providing safety guidance at major incidents. This guideline in no way diminishes the responsibility of each and every member of the Fire Department to work safely at all times and the responsibility of department officers for the safety of their assigned personnel.

Responsibilities assigned to the Safety Officer include:

1. Observe condition of personnel for signs of exhaustion and effects of products of combustion or toxic materials.

2. Observe operations for proper observance of safety procedures by all personnel.

3. Assure proper use of protective clothing and equipment by all personnel within the operating area.

4. Observe the general incident scene for unsafe or hazardous conditions and interact with Command and Division or Group Officers to assure adequate precautions are observed.

1. Sectors - Safety:

These responsibilities are normally assigned to the department Safety Officer. (Radio designation: "SAFETY"). The Plymouth County Fire Chief's Association strongly recommends the appointment of training personnel as safety officers.

When the urgency of the situation demands it, Safety Group personnel have full authority to cause immediate action by direct order to personnel.

Operating personnel receiving safety instructions from the Safety Group shall immediately take appropriate action.

Additional responsibilities in the area of Technical Safety include:

1. Structural Safety: Observation of structural conditions which could present a safety hazard.

2. Monitoring concentrations of toxic or explosive vapors and use of monitoring instruments.

3. Consultation with Command for handling of incidents involving hazardous materials, flammable liquids and other materials presenting unusual problems.

4. Liaison with outside agencies and other departments in situations involving unusual hazards involving sewers, electricity, gas, etc.

2. Sectors - Public Information:

The Information Officer, a member of the command staff, is responsible for the formation and release of information about the emergency incident to the news media and other appropriate agencies and organizations. It is the policy of the Fire Department to establish and maintain a positive operating relationship with the news media.

This outline will establish a procedure to provide the news media with information normally requested from the fire department about fires and other incidents, to control the movement of media personnel for safety reasons and to establish an operating framework for public information that will effectively integrate into the overall incident management system.

2. Sectors - Public Information: (cont.)

STANDARD PUBLIC INFORMATION PROCEDURE

Command will be responsible for the management of public information at an incident. As soon as practical, after rescue and fire operations are placed in operation, Command will establish a Public Information Group. The effective establishment of this sector will both relieve Command of the function of dealing directly with the media during critical command stages and will provide (and Structure) the standard information the media will require to accurately report this situation.

The staff P.I.O. will communicate with Command upon his arrival at the incident to determine the status of the P.I. Group. The staff P.I.O. will automatically establish a P.I. Group, or will relieve the assigned sector officer after normal transfer procedures.

Prior to arrival or in the absence of the staff Public Information Officer, Command may assign an officer to act as the Information Group. The Information Group will obtain a Public Information Worksheet from any Command Vehicle and will begin to collect the information structured on the worksheet. The blocks on the form require the basic information which will provide the media a basis for a story. The Public Information Group will be positioned in a readily visible and accessible location near the Command Post.

Radio designation shall be "Public Information".

P.I.O. FUNCTIONS

Officers or members assigned to perform Public Information Group Functions should be regulated by the following general guidelines. (See Report Form)

If appropriate, add information to the form that will enhance the story of the situation. Such information might include:

1. An extremely hazardous situation

2. A rescue

3. A person or company that did an outstanding job

The extra information will make a better story for the reporters and inform the citizens how the fire department provides fire and/or emergency medical services.

2. Sectors - Public Information: (cont.)

CORRECT AND CURRENT INFORMATION

Make sure that all information given to the media is correct and as current as possible.

MEDIA INQUIRIES

When receiving inquiries from the media seeking information, give them what is available at that point and emphasize that this information is tentative. If it gets to the point that questions from reporters are keeping you from collecting current information, use these alternatives:

1. Gather the media in one place and state that more information will be available shortly.

2. Request additional manpower from Command to utilize as aides to collect additional information and remain with the media personnel.

3. Assist the media with pictures and film footage without interfering with operations while information is obtained.

4. If they have deadlines to meet, get a phone number(s) where they can be reached and phone the facts to them as soon as possible.

5. Before releasing names of persons injured or deceased due to the incident, VERIFY THAT NEXT OF KIN HAVE BEEN NOTIFIED by police and/or hospitals. The Fire Chief, his Deputy, or the fireground commander shall authorize the release of said information, upon verification.

MEDIA PROTECTION

The officers assigned to the Public Information Group may be required to escort media on orientation of the fire damage area following knockdown. The Public Information Group will be responsible for insuring media is wearing proper protective clothing at the incident scene when necessary.

2. Sectors - Public Information: (cont.)

NIGHTS AND WEEKENDS

In some cases incidents will occur during a period when the various news agencies are not staffed. For incidents that occur during these hours, it is important that all information collected at the scene be telephoned to the dispatch officer before the Information Group is terminated. This will allow the dispatchers to relay the information to the media service when they are staffed.

PLYMOUTH COUNTY INCIDENT COMMAND SYSTEM

_____ FIRE DEPARTMENT
INCIDENT REPORT - MEDIA USE

DATE _____ DISPATCH TIME _____ ADDRESS _____

OCCUPANT _____ # OF ENGINES _____ # OF LADDER TRUCKS ____

OF RESCUE UNITS _____ # OF FF @ SCENE _____ # OF ALARMS _____

OFFICER IN CHARGE _____ MUTUAL AID UNITS RESPONDING:
_____

SITUATION ENCOUNTERED BY FIRST ARRIVING UNITS _____
(DESCRIBE) _____
_____
_____

EXTENT OF FIRE DAMAGE _____
EXTENT OF SMOKE DAMAGE _____
EXTENT OF WATER DAMAGE _____

EVACUATION _____ YES _____ NO # OF PEOPLE _____

ANY PEOPLE RELOCATED _____ HOW MANY - WHERE _____

INJURIES (FIRE PERSONNEL) _____
_____

INJURIES (CIVILIANS) _____
_____
_____

HOSPITALIZED (WHO & WHERE) _____
_____

DEATHS _____

SUMMARY OF FIRE ACTIVITY _____
_____

FIRE ORIGIN & CAUSE _____

INVESTIGATED _____ YES _____ NO WHO _____

ESTIMATE OF DAMAGE _____
SOURCE OF ESTIMATE _____
HAZARDOUS CONDITIONS OR MATERIALS _____
REPORT PREPARED BY _____
ORIGINAL _____ UPDATE _____ INCIDENT # _____
FOR FURTHER INFORMATION CONTACT _____ PHONE # _____

3. Sectors - Liaison:

The Liaison Officer is a member of the command staff and is the point of contact for all assisting and cooperating agencies. This includes representatives from other fire departments, police, Red Cross, public works, engineering firms and all other organizations that may provide assistance during emergencies. The liaison officer shall be from the jurisdictional agency.

Duties of the liaison officer include obtaining briefings from command, providing a point of contact for assisting agencies, establishing and maintaining communication links, and monitoring the incident to identify current and future inter-organizational needs and problems.

Realistically, large scale emergencies involve many players. The liaison officer represents command and minimizes commands span of control, looking out for the best interest of the fire service and the needs of assisting agencies.

The radio designation of this officer shall be "Liaison".

E. Command Support Functions:

Command Support functions which may require staffing include:

1. Operations
2. Planning
3. Logistics
4. Finance

ICS ORGANIZATION CHART

COMMAND STAFF & SUPPORT

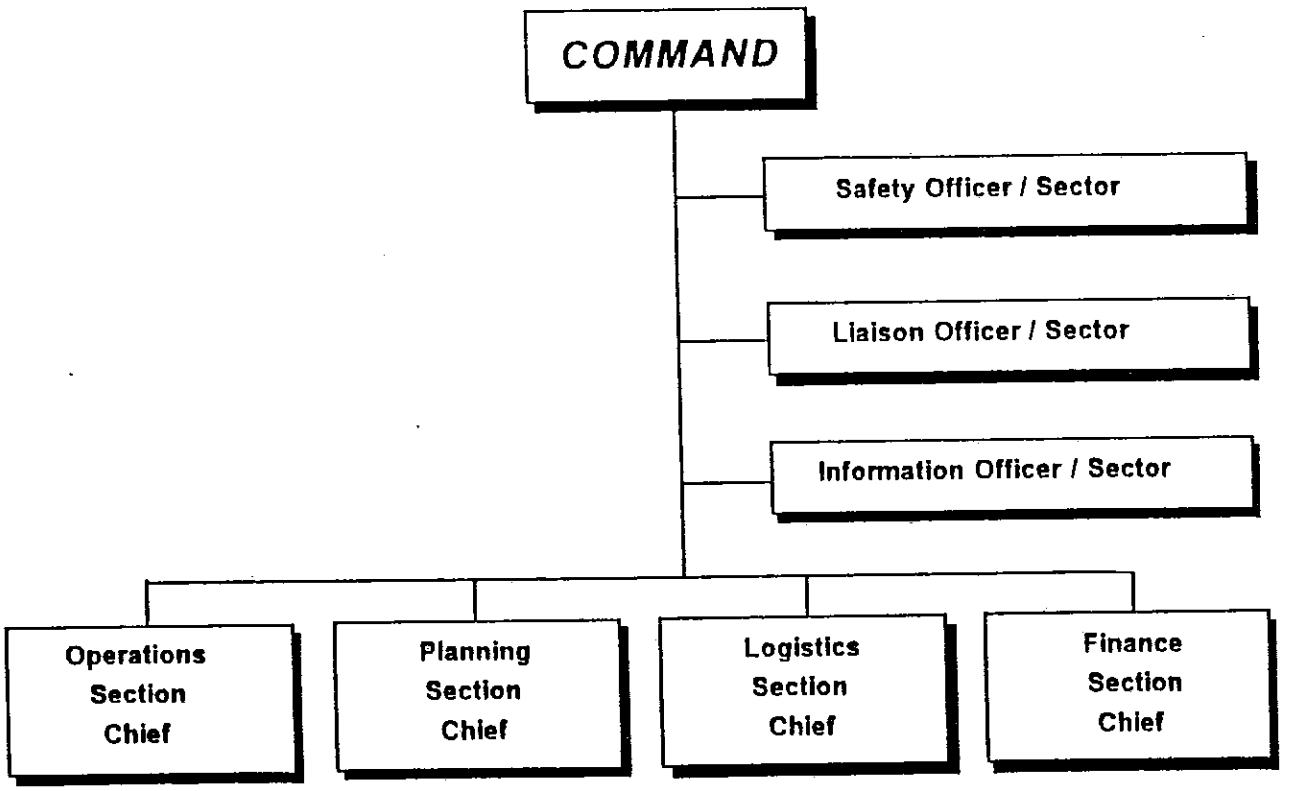

1. Operations

Operations Officer -	directly responsible to IC for management of all tactical operations at the incident.
Operations Section -	those support groups/divisions/other personnel managing tactical operations.
-	directly responsible to Operations Officer.

Responsibilities of operations officer are 1) Directing and coordinating of all tactical operations, 2) Assisting the IC in developing incident strategic goals and tactical objectives, 3) Developing unit operational plans, 4) Requesting or releasing resources through the IC, 5) Consulting with the IC about overall incident action plan, 6) Keeping the IC informed of situation and resource status within operations, and 7) Supervising staging area manager.

Operations officer's position should be implemented when there are span of control problems for the IC, for an incident covering large geographical areas, or complex incidents in which the IC needs assistance determining strategic goals and tactical objectives.

Incident priorities:

Life Safety

Incident Stabilization

Property Conservation

Strategic Goals:

Search and Rescue

Medical Treatment

Confine Fire

Protect Exposure

1. Operations (cont.)

Assignments in support of "Operations" include:

* Branches

Functional level between "divisions" and "groups" and IC or "Operations Officer".

Functional responsibilities:

Primary - implementation of portion of incident action plan assigned

Specific- coordination of unit activity
- evaluate goals & objectives
- request additional resources, if needed
- keep immediate supervisor (IC, or Operations Officer) informed of incident status

Application:

- Used at major incidents involving many companies or agencies.
- Tool to manage span-of-control

* Divisions (geographical location)

- Interior
- Exterior
- Exposure
- Open Land Area

* Group (task)

- Ventilation
- Staging
- Search & Rescue
- Water Supply
- EMS
- Police Liaison
- Rehab
- Decon

Plymouth County Incident Command System Manual

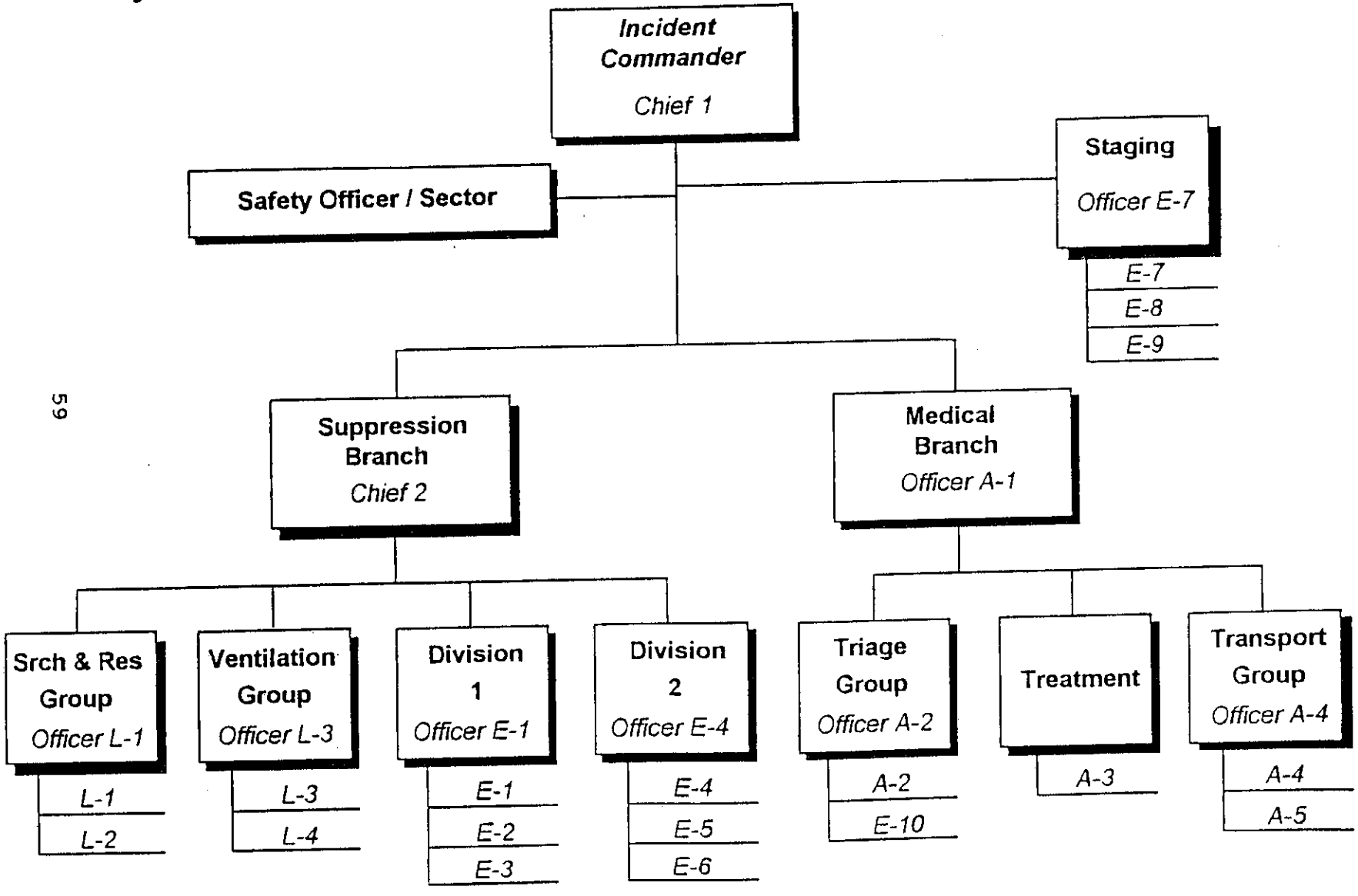

2. Planning

Planning Officer - directly responsible to IC for required information impacting resource status/incident development

Planning Section - those support groups/other personnel collecting, evaluating, disseminating information impacting resource status/incident development

- directly responsible to Planning Officer

By Group:

Resource Status (ReStat) - Functional group with the Plans Section responsible for recording the status of resources committed to an incident.

Situation Status (SitStat) - Functional group within the Plans Section responsible for the analysis of a situation as it progresses.

Documentation - Functional group within the Plans Section responsible for recording/protecting all documents relevant to an incident.

Demobilization - Functional group within the Plans Section responsible for assuring orderly, safe, efficient demobilization of resources committed to an incident.

Technical Specialists - Personnel with special skills specifically activated for those skills. These personnel initially report to the Plans Section but can be further assigned as the incident warrants.

PLYMOUTH COUNTY ICS ORGANIZATION CHART

PLANNING SECTION

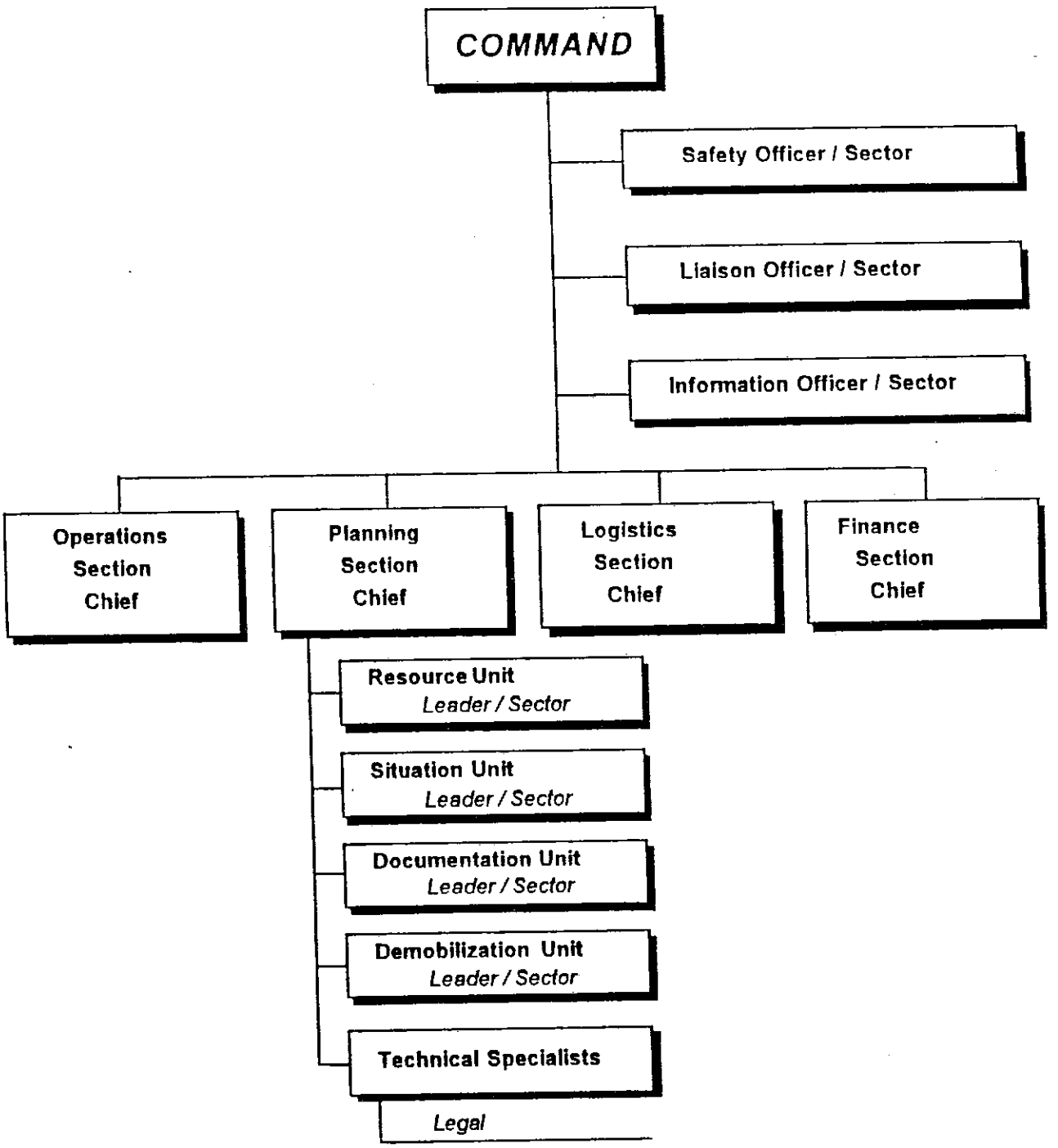

3. Logistics

Logistics Officer - directly responsible to IC for providing facilities, services, materials for incident control

Logistics Section - those support groups/other personnel providing facilities, services, materials for incident control

- directly responsible to Logistics Officer

By Group: Service

Communications - Functional group within the Service Branch of the Logistics Section responsible for the incident communications plan, the installation and repair of communications equipment, and operation of the incident communications center.

Medical - Functional group with the Service Branch of Logistics Section responsible for emergency medical treatment of on-scene emergency personnel.

Food - Function group within the Service Branch of the Logistics Section responsible for providing meals to personnel involved in an incident.

Rehabilitation - Function group within the Service Branch of the Logistics Section responsible for monitoring, evaluation, and appropriate action with respect to the medical condition of emergency response personnel on the incident.

By Group: Support

Supply - Functional group with the Support Branch of the Logistics Section responsible for ordering equipment/supplies required for incident operations.

Facilities - Functional group within the Support Branch of the Logistics Section responsible for providing fixed facilities at an incident, including Base, feeding areas, sanitary facilities, and a formal Command Post.

Ground Support - Functional group with the Support Branch of the Logistics Section responsible for fueling/maintaining/repairing vehicles and the transportation of personnel and supplies at an incident.

PLYMOUTH COUNTY ICS ORGANIZATION CHART

LOGISTICS

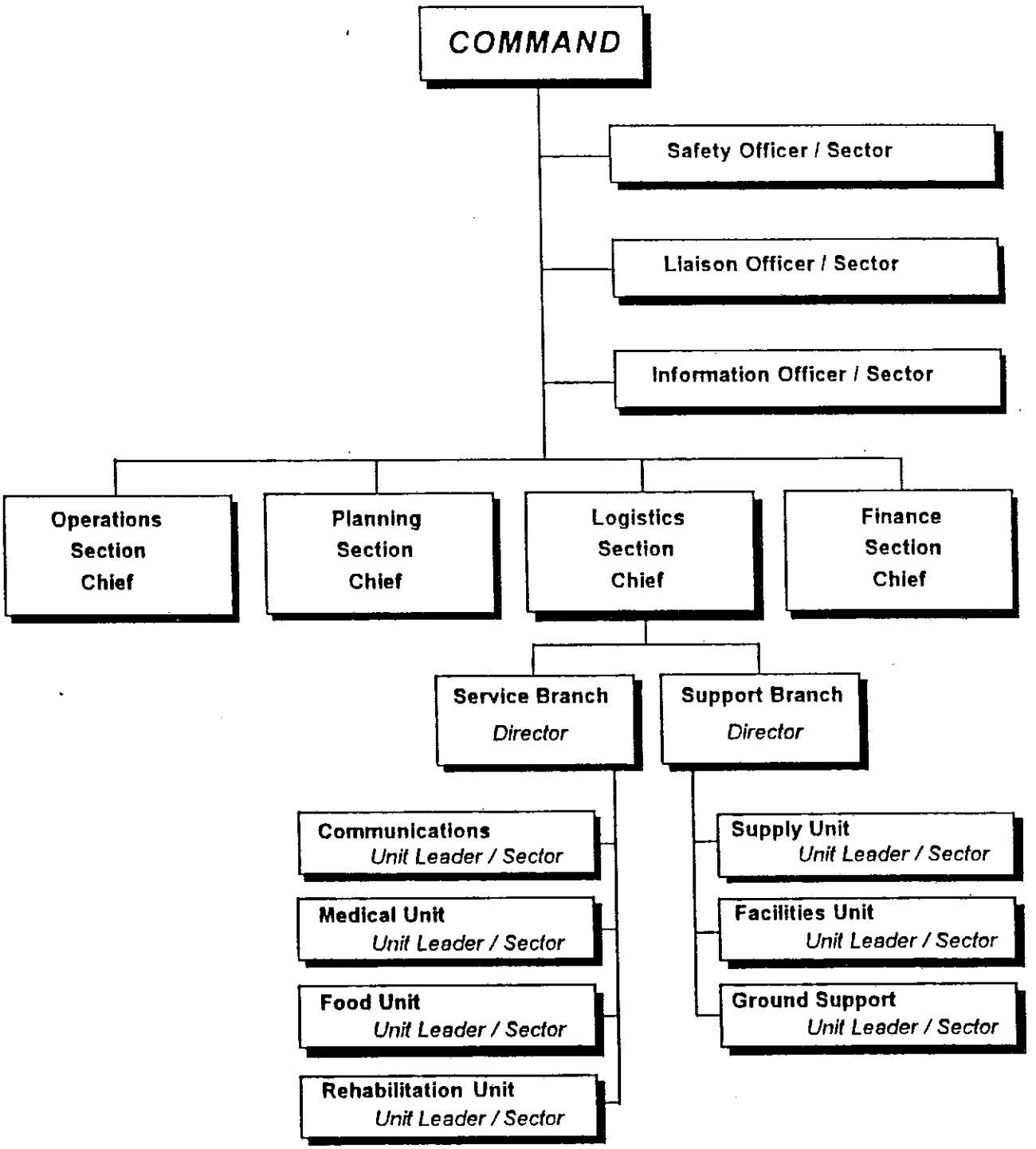

4. Finance

Finance Officer - directly responsible to IC for compiling all costs and financial considerations of incident control

Finance Section - those support groups/other personnel compiling the cost considerations of incident control

- directly responsible to Finance Officer

By Group:

Time - A function group with the Finance Section responsible for record keeping of time for personnel working at an incident.

Procurement - Functional group within the Finance Section responsible for financial matters involving vendors.

Compensations/Claims - Functional group with the Finance Section responsible for financial concerns resulting from injuries or fatalities at an incident.

Cost - Functional group within the Finance Section responsible for tracking costs, analyzing cost data, making cost estimates, and recommending cost-saving measures.

PLYMOUTH COUNTY ICS ORGANIZATION CHART

FINANCE SECTION

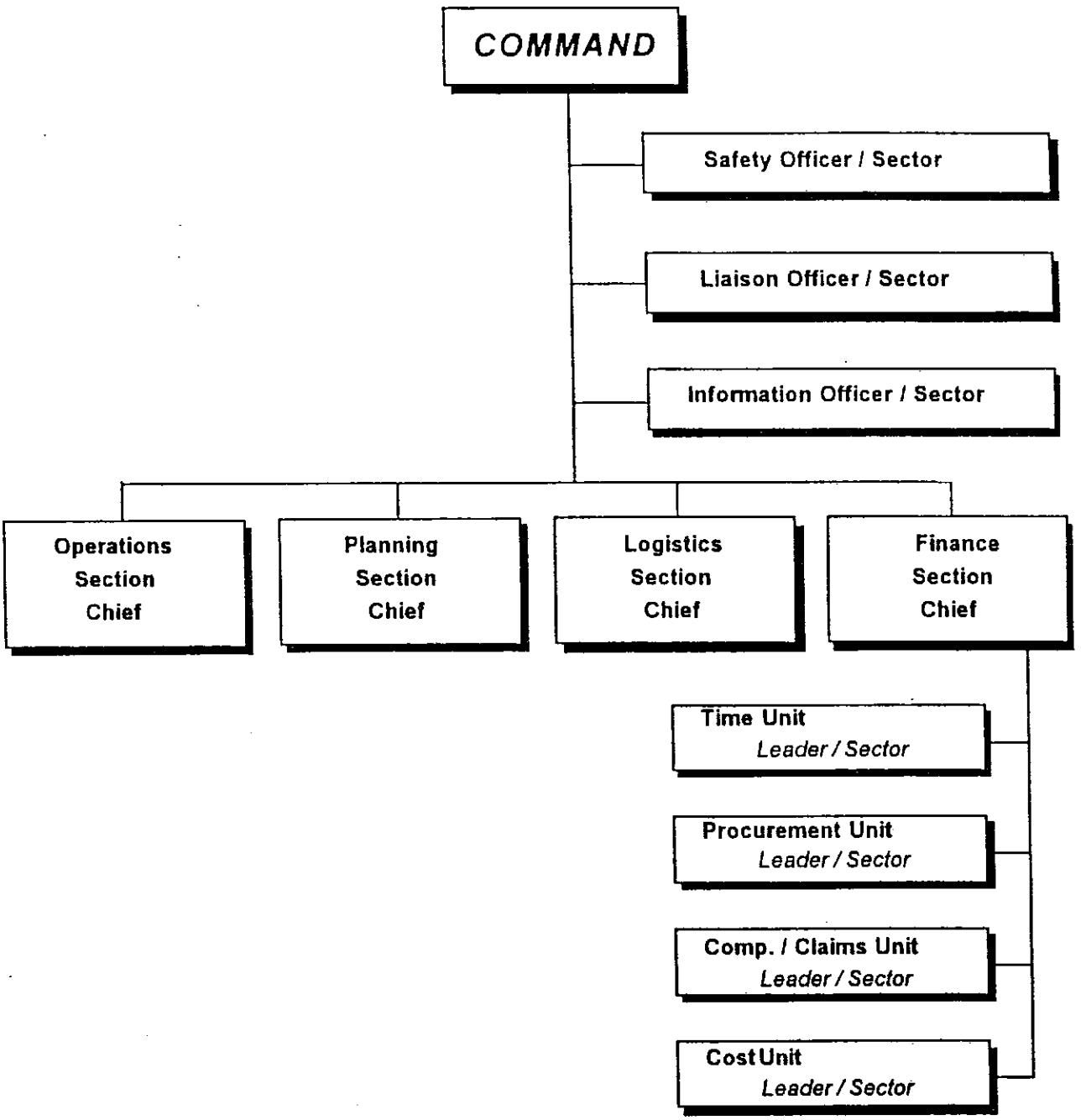

TERMS AND DEFINITIONS

BASE - That location at which the primary logistics functions are coordinated and administered. As differentiated from Staging, resources in Base are not generally ready for immediate deployment. This element is typically staffed at large scale incidents such as high-rise fires where non-essential resources are staged. Base is a Logistics function.

BRANCH - The organizational level having functional/geographic responsibility for major segments of incident operations. This functional level falls between OPERATIONS and DIVISION/GROUP.

BRIEF INITIAL REPORT - The initial status report which includes all of the information necessary to establish the operations at an incident.

BRIEF PROGRESS REPORT - Periodic information on the status of an incident designed to keep interested parties informed as to the progress of the incident.

CHIEF - Functional title of the individual in **COMMAND** of any of the functional sections of the General Staff: Operations, Plans, Logistics, or Finance.

COMMAND - That section of the General Staff responsible for the overall management of incident activities, specifically responsible for assessing incident priorities; developing goals and objectives; developing and implementing incident action plans; developing appropriate command structure; resource management; incident scene safety; liaison with outside agencies; and release of appropriate information to the media.

COMMAND POST - A fixed location at which primary **COMMAND** functions are executed.

COMMAND STAFF - The collective functions of Safety, Liaison, and Information which report directly to the Incident Commander.

COMMUNICATIONS UNIT - Functional unit within the Service Branch of the Logistics Section responsible for the incident communications plan, the installation and repair of communications equipment, and operation of the incident communications center.

COMPANY - A ground vehicle providing specified equipment capability and personnel.

TERMS AND DEFINITIONS (cont.)

COMPENSATIONS/CLAIMS UNIT - Functional unit within the Finance Section responsible for financial concerns resulting from injuries or fatalities at an incident.

COST UNIT - Functional unit within the Finance Section responsible for tracking costs, analyzing cost data, making cost estimates, and recommending cost-saving measures.

CREW - A specific number of personnel not to exceed the recommended span of control of 5 assembled for an assignment. Most often used when company assignments are not available.

DEMOBILIZATION UNIT - Functional unit within the Plans Section responsible for assuring orderly, safe, efficient demobilization of resources committed to an incident.

DIRECTOR - Functional title of the individual in command of a Branch.

DIVISION - That organizational level having responsibility for operations within a defined geographic area. This functional level falls between BRANCH and SINGLE RESOURCES.

DOCUMENTATION UNIT - Functional unit within the Plans Section responsible for recording/protecting all documents relevant to an incident.

FACILITIES UNIT - Functional unit within the Support branch of the Logistics Section responsible for providing fixed facilities at an incident, including Base, feeding areas, sanitary facilities, and a formal Command Post.

FIELD COMMUNICATIONS UNIT - That unit assigned the responsibility for radio communications between Fire Alarm and the incident to which that unit is assigned.

FINANCE SECTION - That section of the General Staff directly responsible to the Incident Commander for all costs and financial considerations of the incident.

FOOD UNIT - Functional unit within the Service Branch of the Logistics Section responsible for providing meals to personnel involved in an incident.

GENERAL STAFF - The collective sections of **COMMAND, OPERATIONS, PLANS, LOGISTICS, and FINANCE.**

TERMS AND DEFINITIONS (cont.)

GROUND SUPPORT UNIT - Functional unit within the Support Branch of the Logistics Section responsible for fueling/maintaining/repairing vehicles and the transportation of personnel and supplies at an incident.

GROUP - That organizational level having responsibility for a specific functional assignment. This functional level falls between BRANCH and SINGLE RESOURCES.

INCIDENT ACTION PLAN/S - General control objectives reflecting the overall incident strategy, and specific action plans for the next operational period. Action plans identify the problem/s (strategies), the solution/s (tactics), and the tactical operation/s (who & when).

INCIDENT COMMANDER - That individual assuming, and having responsibility for, the management of all incident activities.

INFORMATION OFFICER - Responsible for interface with the media or other appropriate agencies requiring information directly from the incident scene.

LEADER - Functional title of any individual in command of a Crew, Task Force, Strike Team, or functional unit.

LIAISON OFFICER - Point of contact for assisting or coordinating agencies.

LOBBY CONTROL - A high-rise logistics function responsible to coordinate the movement of resources between Base and Staging. Also responsible for control of elevator and air handling systems.

LOGISTICS SECTION - That section of the General Staff responsible directly to the Incident Commander for providing facilities, services, and materials for the incident.

MEDICAL UNIT - Functional unit within the Service Branch of the Logistics Section responsible for emergency medical treatment of on-scene emergency personnel.

OFFICER - Functional title of any individual responsible for the Command Staff functions of Safety, Liaison, or Information.

OPERATIONS SECTION - That section of the General Staff responsible directly to the Incident Commander for management of all tactical operations at an incident.

TERMS AND DEFINITIONS (cont.)

PLANS SECTION - That section of the General Staff responsible for the collection, evaluation, dissemination, and use of information about the development of the incident and the status of resources.

PROCUREMENT UNIT - Functional unit within the Finance Section responsible for financial matters involving vendors.

REHABILITATION UNIT - Functional unit within the Service Branch of the Logistics Section responsible for monitoring, evaluation, and appropriate action with respect to the medical condition of emergency response personnel on the incident.

RESOURCE STATUS UNIT (RESTAT) - Functional unit within the Plans Section responsible for recording the status of resources committed to an incident.

SAFETY OFFICER - Responsible for monitoring and assessing safety hazards or unsafe situations and developing measures for ensuring personnel safety.

SECTION - That organizational level having functional responsibility for primary segments of incident operations such as: Operations, Plans, Logistics, and Finance.

SECTORING - The act of dividing an incident into manageable segments. There are two (2) methods of sectoring. They are:

Geographic - The dividing of areas through the use of Divisions.

Functional - The dividing of the incident by specific tasks to be accomplished through the use of Groups or individuals.

SERVICE BRANCH - A Branch within the Logistics Section responsible for service activities at an incident.

SINGLE COMMAND - Command structure in which one individual has sole responsibility for **COMMAND** functions.

SINGLE RESOURCE - An individual company or crew.

SITUATION STATUS UNIT (SITSTAT) - Functional unit within the Plans Section responsible for the analysis of a situation as it progresses.

TERMS AND DEFINITIONS (cont.)

SIZE-UP - The mental evaluation of the various factors at an incident that lead to the determination of the problems that must be solved.

STAGING AREA - That location where personnel and equipment are pooled and ready for immediate deployment in an incident.

STAGING OFFICER - Responsible for the coordination, support, and distribution of incoming resources.

STAIRWELL SUPPORT - A high-rise logistics function responsible for the movement of equipment from Base to Staging when utilizing the stairwell.

STRATEGIC MODE - The mode of attack as specified by the availability of resources compared to the resource requirements of the incident, (I.E.:)

Offensive Mode - Aggressive attack due to the fact that available resources exceed that required by the incident.

Defensive Mode - A protective attack or defense due to the fact that the incident requires more resources than are available.

Offensive/Defensive Mode - A variation of the interior/offensive attack in that it is a combination attack. An aggressive attack will be attempted while backing up hose lines and allowing for defensive coverage, such as covering exposures.

STRATEGY - The overall plan that will be used to control the incident. The purpose towards which all incident activities are directed. Strategic goals are broad definitions of incident problems. Examples: Rescue, Extinguishment, Salvage, etc. Strategy is achieved by the completion of tactics.

STRIKE TEAM - A functional element of up to five (5) units of the same type and under a common communications designation and a common leader.

SUPERVISOR - Functional title of any individual in command of a Division or Group.

SUPPLY UNIT - Functional unit within the Support Branch of the Logistics Section responsible for ordering equipment/supplies required for incident operations.

TERMS AND DEFINITIONS (cont.)

SUPPORT BRANCH - A Branch within the Logistics Section responsible for providing the personnel, equipment, and supplies to support incident operations.

TACTICS - Specific operations that must be accomplished to achieve the strategy. Tactics are both specific and measurable.

TASK FORCE - A functional element of up to five (5) units of mixed type under a common communications designation and a common leader.

TECHNICAL SPECIALISTS - Personnel with special skills specifically activated for those skills. These personnel initially report to the Plans Section but can be further assigned as the incident warrants.

TIME UNIT - A functional unit within the Finance Section responsible for record keeping of time for personnel working at an incident.

UNIFIED COMMAND - The organizational method which allows all agencies or individuals having jurisdictional or legal responsibility towards an incident to contribute to the **COMMAND** function.

UNIT - That organizational element having functional responsibility for a specific incident's planning, logistics, or finance activity.

APPENDIX

MCI Plan: (RESERVED)

1. ICS Worksheet - Fire
2. ICS Worksheet - HazMat

MCI PLAN

(RESERVED)

ICS WORKSHEET - FIRE

ICS WORKSHEET - HazMat